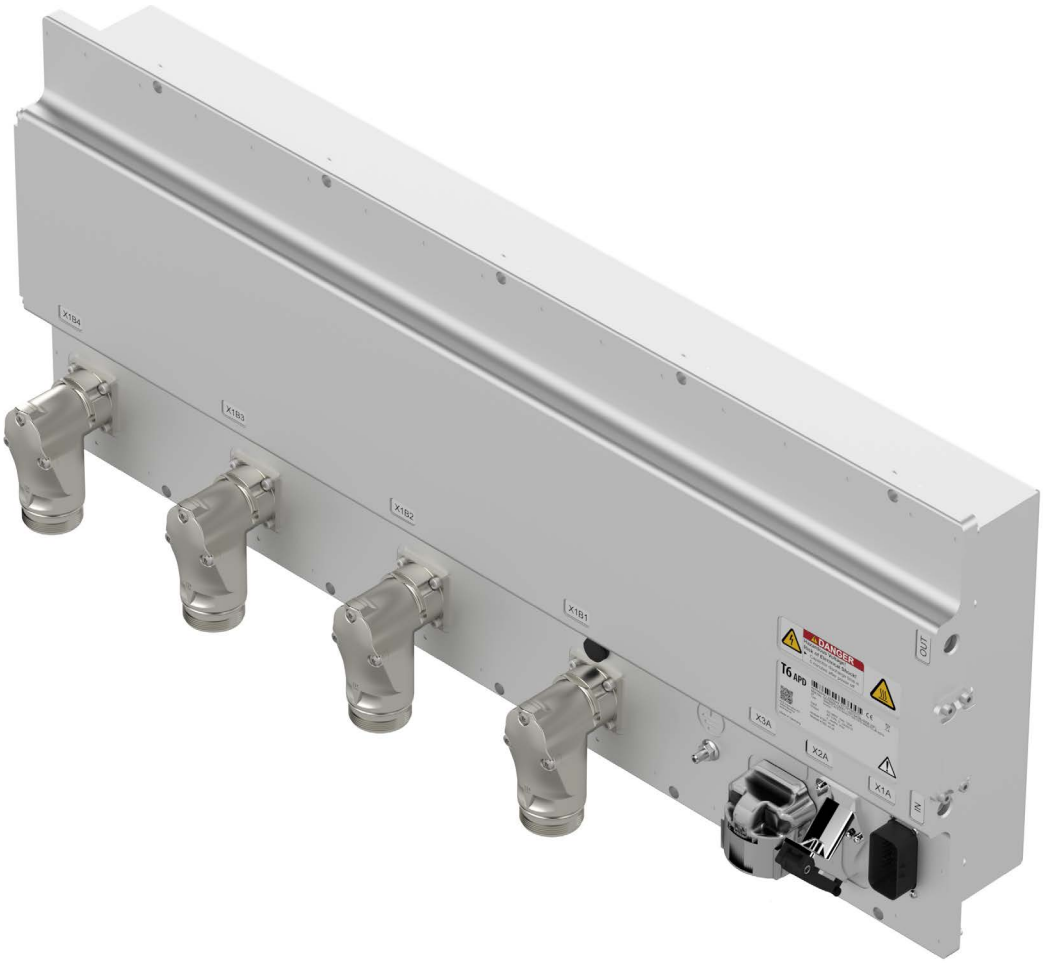

COMBIVERT T6APD

INSTRUCTIONS FOR USE

INSTALLATION MODULAR DRIVE CONVERTER SYSTEM

Translation of the original manual
Document 20108384 EN 05

Preface

The hardware and software described in this document are products of KEB. The information contained in this document is valid at the time of publishing. KEB reserves the right to update this document in response to misprints, mistakes or technical changes.

Signal words and symbols

Certain procedures within this document can cause safety hazards during the installation or operation of the device. Refer to the safety warnings in this document when performing these procedures. Safety signs are also located on the device where applicable. A safety warning is marked by one of the following warning signs:

⚠ DANGER	Dangerous situation, which will cause death or serious injury iif this safety warning is ignored.
⚠ WARNING	Dangerous situation, which may cause death or serious injury if this safety warning is ignored.
⚠ CAUTION	Dangerous situation, which may cause minor injury if this safety warning is ignored.
NOTICE	Situation, which can cause damage to property if this safety warning is ignored.

RESTRICTION

Used when the following statements depend on certain conditions or are only valid for certain ranges of values.

Used for informational messages or recommended procedures.

More symbols

►	This arrow starts an action step.
• / -	Enumerations are marked with dots or indents.
=>	Cross reference to another chapter or another page.

Note to further documentation.
www.keb.de/service/downloads

Laws and guidelines

KEB Automation KG confirms with the EC declaration of conformity and the CE mark on the device nameplate that it complies with the essential safety requirements.

The EC declaration of conformity can be downloaded on demand via our website.

Warranty and liability

The warranty and liability on design, material or workmanship for the acquired device is given in the general sales conditions.

Here you will find our general sales conditions.
www.keb.de/terms-and-conditions

Further agreements or specifications require a written confirmation.

Support

Although multiple applications are referenced, not every case has been taking into account. If you require further information or if problems occur which are not referenced in the documentation, you can request the necessary information via the local KEB agency.

The use of our units in the target products is outside of our control and therefore lies exclusively in the area of responsibility of the customer.

The information contained in the technical documentation, as well as any user-specific advice in spoken and written and through tests, are made to best of our knowledge and information about the intended use. However, they are regarded as being only informal and changes are expressly reserved, in particular due to technical changes. This also applies to any violation of industrial property rights of a third-party. Selection of our units in view of their suitability for the intended use must be done generally by the user.

Tests can only be done within the intended end use of the product (application) by the customer. They must be repeated, even if only parts of hardware, software or the unit adjustment are modified.

Copyright

Table of Contents

List of Figures

List of Tables

Glossary

AC	AC current or voltage
AFE	From 07/2019 AIC replaces the previous name AFE
AFE filter	From 07/2019 AIC filter replaces the previous name AFE filter
AIC	Active Infeed Converter
Ancillary components	All ancillary drives of a vehicle, which effect not or, at least, not immediately its movement
APD	Auxiliaries Power Drives; drive inverter modules
Application	The application is the intended use of the KEB product
ASCL	Asynchronous sensorless closed loop
Attachments	For agricultural machinery e.g. fertilizer spreader, tedders or tools: saw, shredders, etc.
Auto motor ident.	Automatically motor identification; calibration of resistance and inductance
AWG	American wire gauge
B2B	Business-to-business
BAM	Broadcast Announced Message
CAN open	CAN-based communication protocol from automation technology
CAN SAE J1939	SAE J1939 describes the CAN communication in commercial vehicles
COMBIVERT	KEB drive converters
COMBIVIS	KEB start-up and parameterizing software
Customer	The customer has purchased a KEB product from KEB and integrates the KEB product into his product (customer product) or resells the KEB product (dealer)
CV	Commercial vehicle
DC	DC current or voltage
DCU	Drive Control Unit; drive converter control board (drive firmware: u/f, SCL, ASCL)
DIN	German Institut for standardization
DM1	J1939 Diagnostic Message Type
Drive inverter system	Component consisting of several inverter modules
DS 402	CiA DS 402 - CAN device profile for drives
ECE regulations	ECE regulations describe a catalog of internationally agreed uniform technical regulations for vehicles, parts and equipment of motor vehicles.
EMC	Electromagnetic compatibility
Emergency stop	Shutdown of a drive in emergency case (not de-energized)
Emergency switching off	Switching off the voltage supply in emergency case
EN	European standard
End customer	The end customer is the user of the customer product
Ethernet	Real-time bus system - defines protocols, plugs, types of cables
EVCU	Electronic vehicle control unit
FE	Functional earth
Filter	DC EMV filters installed in all inverter modules
FU	Drive converter
GND	Reference potential, ground
HMI	Human machine interface (touch screen)
HV_DC	High voltage DC supply (on-board power supply)
HVAC	Heating - Ventilation - Air conditioning
HVIL	Hazardous Voltage Interlock Loop - Protection against unintentional disconnection of high-voltage plug connections
Hybrid vehicle	Vehicle with 2 different drive sources, e.g. Diesel engine with electric motor (power via battery, supercaps etc) or diesel engine with hydraulic and hydraulic accumulator
Implement	Agricultural for the application of an attachment
Inverter module	AC inverter from a drive inverter system
IP xx	Degree of protection (xx for level)
ISOBUS	ISOBUS defines CAN applications at agricultural machinery
IT mains	General information for ungrounded power system. Therefore, insulation monitoring must be applied as protective measure
KEB product	The KEB product is subject of this manual
KL15 EN	Enable – switched plus from the ignition starter switch

KL30 AUX	Positive cable directly from the battery (switched)
KL31 GND	Negative cable directly from the battery or vehicle mass
KTY	Silicium temperature sensor (polarized)
Manufacturer	The manufacturer is KEB, unless otherwise specified (e.g. as manufacturer of machines, engines, vehicles or adhesives)
MCM	American unit for large wire cross sections
MCU	Main Control Unit - Central connection unit, intelligent control, communication, diagnostics
Modulation	Means in drive technology that the power semiconductors are controlled
NN	Sea level
PE	Protective earth
PELV	Protective Extra Low Voltage
PLC	Programmable Logic Controller
PLC	Programmable logic controller
Power on Demand	Auxiliary units are only activated when required - the T6 system ensures a suitable and efficient adaptation of voltage, currents and frequencies
PT1000	Temperature sensor with R0=1000Ω
PTC	PTC-resistor for temperature detection
PWM	Pulse width modulation
RJ45	Modular connector with 8 lines
SCL	Synchronous sensorless closed loop
SELV	Safety Extra Low Voltage (< 60 V)
SMPS	Switched-mode power supply
T6 APD	Product designation
UT	Utility vehicles
Wizards	Plug & play. Innovative user tools enable fast, intuitive commissioning and operation of the T6 system

List of standards

DGUV regulation 3	Electrical installations and equipment
DIN EN 55012	Vehicles, boats and internal combustion engine driven devices - Radio disturbance characteristics - Limits and methods of measurement for the protection of receivers except those installed in the vehicle/boat/device itself or in adjacent vehicles/boats/devices (IEC/CISPR 12); German version EN 55012
DIN EN 55025	Radio disturbance characteristics for the protection of receivers used on board vehicles, boats, and on devices - Limits and methods of measurement (IEC/CISPR 25); German version EN 55025
DIN EN 60068-2-1	Environmental testing - Part 2-1: Tests - Test A: Cold (IEC 60068-2-1); German version EN 60068-2-1
DIN EN 60068-2-2	Environmental testing - Part 2-2: Tests - Test B: Dry heat (IEC 60068-2-2; German version EN 60068-2-2
DIN EN 60068-2-11	Environmental testing - Part 2: Tests; test Ka: Salt mist (IEC 60068-2-11:1981); German version EN 60068-2-11
DIN EN 60068-2-14	Environmental testing - Part 2-14: Tests - Test N: Change of temperature (IEC 60068-2-14); German version EN 60068-2-14
DIN EN 60068-2-27	Environmental testing - Part 2-27: Tests - Test Ea and guidance: Shock (IEC 60068-2-27); German version EN 60068-2-27
DIN EN 60068-2-30	Environmental testing - Part 2-30: Tests - Test Db: Damp heat, cyclic (12 h + 12 h cycle) (IEC 60068-2-30); German version EN 60068-2-30
DIN EN 60068-2-31	Environmental testing - Part 2-31: Tests - Test Ec: Rough handling shocks, primarily for equipment-type specimens (IEC 60068-2-31); German version EN 60068-2-31
DIN EN 60068-2-38	Environmental testing - Part 2-38: Tests - Test Z/AD: Composite temperature/humidity cyclic test (IEC 60068-2-38); German version EN 60068-2-38
DIN EN 60068-2-52	Environmental testing - Part 2: Tests, Test Kb: Salt mist, cyclic (sodium chloride solution) (IEC 60068-2-52); German version EN 60068-2-52
DIN EN 60068-2-64	Environmental testing - Part 2-64: Tests - Test Fh: Vibration, broadband random and guidance (IEC 60068-2-64); German version EN 60068-2-64
DIN EN 60068-2-78	Environmental testing - Part 2-78: Tests - Test Cab: Damp heat, steady state (IEC 60068-2-78); German version EN 60068-2-78
DIN EN 60529	Degrees of protection provided by enclosures (IP Code) (IEC 60529); German version EN 60529
DIN EN 60664-1	Insulation coordination for equipment within low-voltage systems - Part 1: Principles, requirements and tests (IEC 60664-1); German version EN 60664-1
DIN EN 61000-4-2	Electromagnetic compatibility (EMC) - Part 4-2: Testing and measurement techniques - Electrostatic discharge immunity test (IEC 61000-4-2); German version EN 61000-4-2
DIN EN 61000-4-3	Electromagnetic compatibility (EMC) - Part 4-3: Testing and measurement techniques - Radiated, radio-frequency, electromagnetic field immunity test (IEC 61000-4-3); German version EN 61000-4-3
DIN EN 61000-4-4	Electromagnetic compatibility (EMC) - Part 4-4:Testing and measurement techniques - Electrical fast transient/burst immunity test (IEC 61000-4-4); German version EN 61000-4-4
DIN EN 61000-4-5	Electromagnetic compatibility (EMC) - Part 4-5: Testing and measurement techniques - Surge immunity test (IEC 61000-4-5); German version EN 61000-4-5
DIN EN 61000-4-6	Electromagnetic compatibility (EMC) - Part 4-6: Testing and measurement techniques - Immunity to conducted disturbances, induced by radio-frequency fields (IEC 61000-4-6); German version EN 61000-4-6

DIN EN 61131-3	Programmable controllers - Part 3: Programming languages (IEC 61131-3:2013); German version EN 61131-3:2013
DIN EN 61800-3	Adjustable speed electrical power drive systems - Part 3: EMC requirements and specific test methods (IEC 61800-3); German version EN 61800-3
DIN EN 61800-5-1	Adjustable speed electrical power drive systems - Part 5-1: Safety requirements - Electrical, thermal and energy (IEC 61800-5-1); German version EN 61800-5-1
DIN EN ISO 4762	Hexagon socket head cap screws (ISO 4762:2004); German version EN ISO 4762:2004
DIN IEC 60364-5-54	Low-voltage electrical installations - Part 5-54: Selection and erection of electrical equipment - Earthing arrangements, protective conductors and protective bonding conductors (IEC 64/1610/CD:2007)
ECE R10:Rev.5	Uniform provisions concerning the approval of vehicles with regard to electromagnetic compatibility
ECE R100:Rev.2	Uniform provisions concerning the approval of vehicles with regard to specific requirements for the electric power train
EN 60204-1	Safety of machinery - Electrical equipment of machines - Part 1: General requirements (IEC 44/709/CDV:2014); German version FprEN 60204-1:2014
ISO 11452-1	Road vehicles - Component test methods for electrical disturbances from narrowband radiated electromagnetic energy - Part 1: General principles and terminology
ISO 11452-2	Road vehicles - Component test methods for electrical disturbances from narrowband radiated electromagnetic energy - Part 2: Absorber-lined shielded enclosure
ISO 11452-4	Road vehicles - Component test methods for electrical disturbances from narrowband radiated electromagnetic energy - Part 4: Harness excitation methods
ISO 11783-1	Tractors and machinery for agriculture and forestry - Serial control and communications data network - Part 1: General standard for mobile data communication
ISO 16750-1	Road vehicles - Environmental conditions and testing for electrical and electronic equipment - Part 1: General
ISO 16750-2	Road vehicles - Environmental conditions and testing for electrical and electronic equipment - Part 2: Electrical loads
ISO 16750-3	Road vehicles - Environmental conditions and testing for electrical and electronic equipment - Part 3: Mechanical loads
ISO 16750-4	Road vehicles - Environmental conditions and testing for electrical and electronic equipment - Part 4: Climatic loads
ISO 16750-5	Road vehicles - Environmental conditions and testing for electrical and electronic equipment - Part 5: Chemical loads
ISO 20653	Road vehicles - Degrees of protection (IP code) - Protection of electrical equipment against foreign objects, water and access
ISO 6469-3	Electrically propelled road vehicles - Safety specifications - Part 3: Protection of persons against electric shock
ISO 7637-2	Road vehicles - Electrical disturbances from conduction and coupling - Part 2: Electrical transient conduction along supply lines only
ISO 7637-3	Road vehicles - Electrical disturbances from conduction and coupling - Part 3: Electrical transient transmission by capacitive and inductive coupling via lines other than supply lines
SAE J 1939	Serial Control and Communications Heavy Duty Vehicle Network - Top Level Document
VDE V 0160-106	Adjustable speed electric power drive systems - Part 6: Guide for determination of types of load duty and corresponding current ratings (IEC/TR 61800-6:2003); German version CLC/TR 61800-6:2007

VGB R 455 P	Water treatment and use of materials in cooling systems
Vo 2015/208	Commission delegated regulation (EU) 2015/208 of 8 December 2014 supplementing Regulation (EU) No 167/2013 of the European Parliament and of the Council with regard to vehicle functional safety requirements for the approval of agricultural and forestry vehicles

1 Basic Safety Instructions

The COMBIVERT is designed and constructed in accordance with state-of-the-art technology and the recognized safety rules and regulations However, the use of such devices may cause functional hazards for life and limb of the user or third parties, or damages to the system and other material property.

The following safety instructions have been created by the manufacturer for the area of electric drive technology. They can be supplemented by local, country- or application-specific safety instructions. This list is not exhaustive. Violation of the safety instructions by the customer, user or other third party leads to the loss of all resulting claims against the manufacturer.

NOTICE

Hazards and risks through ignorance.

► Read the instructions for use !

► Observe the safety and warning instructions !

► If anything is unclear, please contact KEB Automation KG !

1.1 Target group

This instruction manual is determined exclusively for electrical personnel. Electrical personnel for the purpose of this instruction manual must have the following qualifications:

- Knowledge and understanding of the safety instructions.
- Skills for installation and assembly.
- Start-up and operation of the product.
- Understanding of the function in the used machine.
- Detection of hazards and risks of the electrical drive technology.
- Knowledge of *DIN IEC 60364-5-54.*
- Knowledge of national safety regulations.

1.2 Transport, storage and proper use

The transport is carried out by qualified persons in accordance with the environmental conditions specified in this manual. The inverter modules shall be protected against excessive strains.

Transport of drive inverter with an edge length >75 cm

The transport by forklift without suitable tools can cause a deflection of the heat sink. This leads to premature aging or destruction of internal components.

► Transport of drive inverter on suitable pallets.

► Do not stack drive inverter or load it with other heavy objects.

Drive controllers contain electrostatic sensitive components.

► Avoid contact.

► Wear ESD-protective clothing.

Do not store drive controllers

- in the environment of aggressive and/or conductive liquids or gases.
- with direct sunlight.
- outside the specified environmental conditions.

1.3 Installation

⚠ DANGER

Risk of explosion due to sparking on and in the device!

► When used in an explosive atmospheres, the corresponding requirements must be met.

► Check device connections for tightness to avoid contact resistances and sparking.

⚠ CAUTION

Maximum design edges and high weight!

Contusions and bruises!

► Never stand under suspended loads.

► Wear safety shoes.

► Secure drive inverter accordingly when using lifting gear.

To prevent damages to the device:

- The drive inverter must not be opened.
- The device must not be put into operation in case of mechanical defects. Non-compliance with the applicable standards.
- Mount the drive inverter according to the specified degree of protection. Position protected as possible against environmental influences and mechanical environmental conditions.
- Note installation position and minimum distances to surrounding elements. Select the largest possible distance to existing heat sources. Do not bend the connection cable and cooling hoses and secure with strain relief.
- Do not walk-on drive inverter.
- Do not operate the drive inverter without connected cooling circuit.

Vehicles which include drive inverter shall be equipped with additional control and protective devices in accordance with the relevant applicable safety requirements, e.g. act respecting technical equipment, accident prevention rules etc. They must always be complied with, also for drive inverters bearing a CE marking.

1.4 Electrical connection

⚠ DANGER

Voltage at the terminals and in the device!

Danger to life due to electric shock!

- ► Voltages up to DC 820 V and AC 580 V at the connections.
- ► For any work on the unit switch off the supply voltage, secure it against switching on and check absence of voltage by measurement.
- ► All pluggable connection terminals must only be connected or disconnected when no voltage is applied.
- ► Wait until all drives has been stopped in order that no regenerative energy can be generated.
- ► Await capacitor discharge time (5 minutes).
- ► Install suitable protective devices for drive inverters.
- ► Never bridge upstream protective devices (also not for test purposes).
- ► Connect the protective earth conductor always to drive inverter and motor.
- ► Install all required covers and protective devices for operation.
- ► Residual current: This product may cause a dc current in the protective earth conductor. When a residual current protective device (RCD) or a residual current monitoring device (RCM) is used for the protection against direct or indirect contact, only a RCD or RCM type B is permitted on the power supply side of this product.
- ► Drive inverters with a leakage current > 3.5 mA AC current (10 mA DC current) are intended for a stationary connection. Protective earth conductors must be designed in accordance with the local regulations for equipment with high leakage currents according to *DIN EN 61800-5-1, EN 60204-1* or *DIN IEC 60364-5-54* .

For a trouble-free and safe operation, please pay attention to the following instructions:

- The electrical installation shall be carried out in accordance with *ECE R10:Rev.5, ECE R100:Rev.2* and with the relevant requirements.
- Cable cross-sections and fuses must be dimensioned according to the design of the machine / vehicle manufacturer.
- The T6APD must be connected via a suitable precharging circuit.
- The minimum cross-section of the protective earth conductor depends on the cross-section of the supply cable. A cross-section smaller than 10 mm^2 Cu or 16 mm^2 Al is not permitted.
- The machine / vehicle manufacturer must ensure that the EN requirements are met with existing or newly wired circuit with safe isolation.
- When using components without isolated inputs/outputs, it is necessary that equipotential bonding exists between the components to be connected (e.g. by the equipotential line). Disregard can cause destruction of the components by equalizing currents.
- Observe bending radii for cables and hoses.

1.4.1 EMC-compatible installation

Observance of the limit values required by EMC law is the responsibility of the customer.

1.4.2 Voltage test

Testing with AC voltage (in accordance with *EN 60204-1* Chapter 18.4) may not be executed, since there is danger for the power semiconductors in the drive inverter. Additionally the generator will trigger immediately with current error due to the noise suppression capacitors.

Accordng to *EN 60204-1* it is permissible to disconnect already tested components. Drive inverters of KEB Automation KG are delivered ex works voltage tested to 100% according to product standard.

1.4.3 Insulation measurement

An insulation measurement (in accordance with *EN 60204-1* Chapter 18.3 for industrial machines) with DC 500 V is permissible, if all power unit connections (grid-connected potential) and all control connections are bridged with PE.

1.5 Requirements to the entire system

To ensure the electrical safety of the entire system, the following must be observed in accordance with the requirements of *ISO 6469-3*:

- The HV-DC/AC circuits must be provided with protective separation or increased insulation compared to the touchable LV circuits.
- The insulation (separation / barriers / housing) has to be designed by way that its durability is ensured over the entire service life.
- The test voltages required for the detection of the insulation properties can be taken from the chapter *„3.1 Operating conditions“*.

⚠ DANGER

Personal protection - tasks of the customer!
Danger to life due to electric shock.

► The HV-DC / AC circuits are provided with protective separation against touchable circuits (= reinforced insulation). This should be maintained in the final application!

► Detect faults by installing a suitable protective device (e.g. insulation monitor) and then switch off.

1.6 Start-up and operation

The drive controller must not be started until it is determined that the installation complies with the machine directive; Account is to be taken of *EN 60204-1*.

⚠ WARNING

Software protection and programming!

Hazards caused by unintentional behavior of the drive!

- ► Check especially during initial start-up or replacement of the drive controller if parameterization is compatible to application.
- ► Securing a unit solely with software-supported functions is not sufficient. It is imperative to install external protective measures (e.g. limit switch) that are independent of the drive controller.
- ► Secure motors against automatic restart.

The COMBIVERT T6APD system can be adapted to a wide variety of applications by parameterization. The parameterization is carried out via a main controller (MCU), which communicates with the individual axis controllers (DCUs). The main controller contains additionally a freely programmable control unit where the customer can store software related to his application (customer software). The customer software can already be installed at KEB on request.

NOTICE

Use of customer software in our devices!

- ► The use of customer software in the target products with regard to location, purpose and application is outside our control and therefore lies exclusivelsy in the area of responsibility of the customer.
- ► Checks and tests can only be done in combination with the application.
- ► Checks and tests have to be repeated if hardware, firmware, software, device setting or only parts thereof are modified by KEB.
- ► The customer confirms with a release from liability the responsibility for the customer software towards KEB.

The T6APD system has two CAN interfaces whose parameters and behavior can be freely configured in many areas by the customer software and parameterization. The writing of the customer software and the examination of the customer software for any dangers, which could result from it, is the responsibility of the customer and is not owed by KEB. For these reasons, KEB is not liable for the behavior of the CAN interfaces and any resulting hazards or damages.

⚠ WARNING

Installation, configuration or program errors can cause malfunctions or total failure of other CAN bus nodes!

- ► The programming of the customer software must be carried out in such a way that other CAN bus nodes continue to function in error case.
- ► The programming of the customer software must be tested by the customer in the application.
- ► Observe cable length and transmission speed.
- ► Terminate the bus line with terminating resistors.
- ► The customer assumes the responsibility for the installation, customer software or parameterization.

⚠ CAUTION

High temperatures at heat sink and coolant!

Burning of the skin!

- ► Cover hot surfaces safe-to-touch.
- ► If necessary, attach warning signs on the system.
- ► Before touching, check the surface and cooling water lines.
- ► Before working let the unit cool down.

- The supplied plastic cap is only a transport protection.
  Degree of protection can only be maintained when connected.
- Use only approved accessories for this device.
- Never touch terminals or cable ends.

Switching at the output

Switching between motor and drive inverter is prohibited for single drives during operation as this may trigger the protection gear of the device. Function speed search must be activated if switching can not be avoided. Control release may only be triggered after closing the motor contactor (e.g. by switching the control release).

Connecting and disconnecting is permissible with multiple motor drives if at least 1 motor is running during the switch-over process. The drive inverter must be dimensioned to the occurring starting currents.

Short-circuit resistance

The drive inverters are conditional short-circuit proof. After resetting the internal protection devices, the function as directed is guaranteed.

Exceptions:

- If an earth-leakage fault or short-circuit often occurs at the output, this can lead to a defect in the unit.
- If a short-circuit occurs during regenerative operation (2nd or 4th quadrant, regeneration into the DC link), this can lead to a defect in the unit.

1.7 Maintenance

The following maintenance work must be carried out by authorized and instructed personnel. The interval depends on the installation and is determined by the customer.

- ► Check unit for loose screws and plugs and tighten if necessary.
- ► Clean drive inverter from dirt and dust deposits.
- ► Make a visual leak test of the cooling circuit for liquid-cooled drive inverters.

1.8 Repair

In case of malfunction, unusual noises or smells inform a person in charge!

⚠ DANGER

Unauthorized exchange, repair and modifications!

Unpredictable malfunctions!

- ► The function of the drive inverter is dependent on its parameterization. Never replace drive inverter without knowledge of the application.
- ► Modification or repair is permitted only by authorized personnel by KEB.
- ► Only use original manufacturer parts.
- ► Infringement will annul the liability for resulting consequences.

In case of failure, please contact the vehicle manufacturer. Only the vehicle manufacturer knows the parameterisation of the used drive inverter and can provide an appropriate replacement or induce the maintenance.

1.9 Disposal

Electronic devices of the KEB Automation KG are exclusively professional devices for further industrial processing (so-called B2B devices).

Manufacturers of B2B devices are obliged to take back and recycle devices manufactured after 14.08.2018. These devices may not be disposed at the collection centres of public sector disposal organisations.

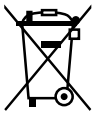

If no deviating agreement has been made between the customer and KEB or no deviating mandatory legal regulation exists, KEB products marked in this way can be returned. Company and keyword to the return point can be taken from the list below. Shipping costs are paid by the customer. Thereupon the devices will be professionally recycled and disposed.

The entry numbers are listed country-specific in the following table. The corresponding KEB return addresses can be found on our website.

Withdrawal by	WEEE-Reg.-No.		Keyword
Austria			
KEB Automation GmbH	ERA:	51976	Stichwort „Rücknahme WEEE“
France			
RÉCYLUM - Recycle point	ADEME:	FR021806	Mots clés „KEB DEEE“
Germany			
KEB Automation KG	EAR:	DE12653519	Stichwort „Rücknahme WEEE“
Italy			
COBAT	AEE: (IT)	19030000011216	Parola chiave „Ritiro RAEE“
Spain			
KEB Automation KG	RII-AEE	7427	Palabra clave „Retirada RAEE“
Česko			
KEB Automation KG	RETELA	09281/20 ECZ	Klíčové slovo: Zpětný odběr OEEZ

The packaging must be feed to paper and cardboard recycling.

2 Product Description

COMBIVERT T6APD Series

Electric drive solutions for commercial vehicles and mobile machines

Modular inverter system for the electrification of auxiliary drives.

A modular and scalable multi-inverter system, especially for the control of auxiliary units and auxiliary drives in commercial vehicle applications.

As a system consisting of an intelligent control, AC inverters in 3 output sizes and integrated EMC filter solutions, T6APD offers significant space requirements, cabling and costs compared to a conventional system.

Modular and scalable - flexible and easy integration

Due to its modular design, the T6APD system is scalable and can be flexibly adapted to specific vehicle requirements. The modular structure enables integration from 1 to max. 6 inverter modules, each available in 3 output sizes with rated output currents of 16.5 A, 33 A and 60 A.

Encoderless control of motors - excellent shaft performance

The motor control of each inverter supports a great number of control algorithms. Supported motor types are synchronous and asynchronous motors and synchronous reluctance motors.

T6APD enables dynamic, energy-efficient speed and torque control and closed-loop positioning without the need of encoder feedback (SCL - sensorless closed loop).

Intelligent control and variable communication connection

The intelligent control in the T6APD is freely programmable according to *DIN EN 61131-3*. CODESYS based and with the J1939 CAN APP a communication gateway is provided for the superordinate vehicle control system.

Integrated EMC solutions

In combination with other high-voltage components in the vehicles, the common mode DC EMC filters installed as standard ensure high operational reliability.

Automotiv qualified

The modular inverter system of the T6APD series is designed for use in hybrid or fully electric commercial vehicles with an on-board high voltage DC voltage supply. It meets the high demands placed on automotive systems in terms of mechanical and thermal properties, environmental conditions, EMC, safety and service life.

System architecture

MCU - Intelligent Control - embedded Control

- PLC, *DIN EN 61131-3* programming environment, CODESYS based, freely programmable with COMBIVIS studio 6
- Communication via two individual CAN interfaces

Inverter module - power electronics - AC inverter

- Inverter module A → rated output current I_N 16.5A
- Inverter module B → rated output current I_N 33A
- Inverter module C → rated output current I_N 60A

Inverter module - Software functionality

- Dynamic speed and torque adjustment
- Excellent shaft performance
- SCL encoderless control of motors
- Automatic identification of motor resistance, inductance and rotor position detection

EMC - Electromagnetic compatibility

- Integrated common-mode DC EMC filters in each inverter module for decoupling from the high-voltage DC voltage supply

Applications

Electrification of auxiliary units and auxiliary drives

- Power steering pumps, air compressors, air conditioning and cooling systems, turbo compressors

Typical application areas

- Public transport buses
- Municipal vehicles - refuse collection vehicles and sweeping machines
- Agricultural machinery - tractors and mounted equipment
- Mobile machines - construction machinery
- Transport and logistics - inner-city delivery traffic for the “last mile”

2.1 T6APD - Principle construction

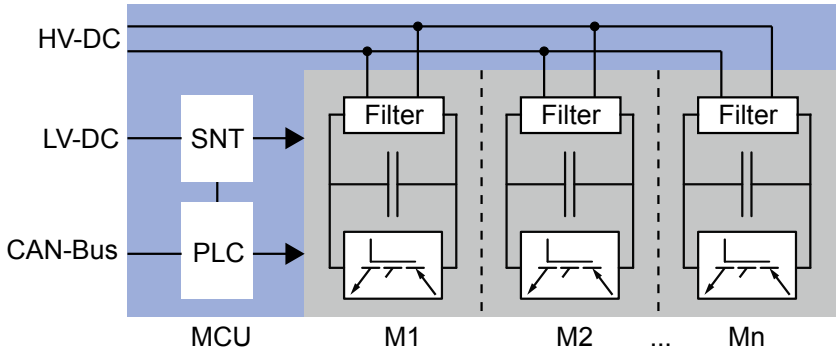

Legend	
HV-DC	High-voltage DC supply
LV-DC	Low-voltage DC supply
CAN bus	Communication
MCU	Main Control Unit: Central connection unit, intelligent control (PLC) and switch-mode power supply (SNT)
Filter	DC EMC filter
M1…Mn	Inverter modules A / B / C

Figure 1: T6APD - Principle construction

2.1.1 System architecture

The COMBIVERT T6APD is available in six system lengths. Each system length consists of the MCU as well as different configurations of inverter modules A, B and C.

Basic devices			Rated output current I_N / A (f_S = 8 kHz; $U_{N\_HV\_dc}$ = 565 V; f_N = 50 Hz)						Weight in kg
System length	Length in mm	System configuration	Module 1	Module 2	Module 3	Module 4	Module 5	Module 6	
A	346	C	60	–	–	–	–	–	9,5
		B	33	–	–	–	–	–	8,9
		A	16,5	–	–	–	–	–	8,7
B	496	CC	60	60	–	–	–	–	14,7
		CB	60	33	–	–	–	–	14,1
		CA	60	16,5	–	–	–	–	14
		BB	33	33	–	–	–	–	13,5
		BA	33	16,5	–	–	–	–	13,4
		AA	16,5	16,5	–	–	–	–	13,3
C	646	CCC	60	60	60	–	–	–	19,8
		CCB	60	60	33	–	–	–	19,2
		CCA	60	60	16,5	–	–	–	19,1
		CBB	60	33	33	–	–	–	18,5
		CBA	60	33	16,5	–	–	–	18,4
		CAA	60	16,5	16,5	–	–	–	18,3
		BBB	33	33	33	–	–	–	17,9
		BBA	33	33	16,5	–	–	–	17,8
		BAA	33	16,5	16,5	–	–	–	17,7
		AAA	16,5	16,5	16,5	–	–	–	17,6
D	796	CCCC	60	60	60	60	–	–	25
		CCCB	60	60	60	33	–	–	24,3
		CCCA	60	60	60	16,5	–	–	24,2
		CCBB	60	60	33	33	–	–	23,7
		CCBA	60	60	33	16,5	–	–	23,6
		CCAA	60	60	16,5	16,5	–	–	23,5
		CBBB	60	33	33	33	–	–	23,1
		CBBA	60	33	33	16,5	–	–	23
		CBAA	60	33	16,5	16,5	–	–	22,9
		CAAA	60	16,5	16,5	16,5	–	–	22,8
		BBBB	33	33	33	33	–	–	22,4
		BBBA	33	33	33	16,5	–	–	22,3
		BBAA	33	33	16,5	16,5	–	–	22,2
		BAAA	33	16,5	16,5	16,5	–	–	22,1
		AAAA	16,5	16,5	16,5	16,5	–	–	22

continued on the next page

Basic devices			Rated output current I_N / A (f_S = 8 kHz; $U_{N\_HV\_dc}$ = 565 V; f_N = 50 Hz)						Weight in kg
System length	Length in mm	System configuration	Module 1	Module 2	Module 3	Module 4	Module 5	Module 6	
E	946	CCCCC	60	60	60	60	60	–	30
		CCCCB	60	60	60	60	33	–	29,5
		CCCCA	60	60	60	60	16,5	–	29,4
		CCCBB	60	60	60	33	33	–	28,8
		CCCBA	60	60	60	33	16,5	–	28,7
		CCCAA	60	60	60	16,5	16,5	–	28,6
		CCBBB	60	60	33	33	33	–	28,2
		CCBBA	60	60	33	33	16,5	–	28,1
		CCBAA	60	60	33	16,5	16,5	–	28
		CCAAA	60	60	16,5	16,5	16,5	–	27,9
		CBBBB	60	33	33	33	33	–	27,6
		CBBBA	60	33	33	33	16,5	–	27,5
		CBBAA	60	33	33	16,5	16,5	–	27,4
		CBAAA	60	33	16,5	16,5	16,5	–	27,3
		CAAAA	60	16,5	16,5	16,5	16,5	–	27,2
		BBBBB	33	33	33	33	33	–	27
		BBBBA	33	33	33	33	16,5	–	26,9
		BBBAA	33	33	33	16,5	16,5	–	26,8
		BBAAA	33	33	16,5	16,5	16,5	–	26,7
		BAAAA	33	16,5	16,5	16,5	16,5	–	26,6
		AAAAA	16,5	16,5	16,5	16,5	16,5	–	26,5

continued on the next page

Basic devices			Rated output current I_N / A (f_s = 8 kHz; $U_{N\_HV\_dc}$ = 565 V; f_N = 50 Hz)						Weight in kg
System length	Length in mm	System configuration	Module 1	Module 2	Module 3	Module 4	Module 5	Module 6	
F	1096	CCCCCC	60	60	60	60	60	60	35,2
		CCCCCB	60	60	60	60	60	33	34,6
		CCCCCA	60	60	60	60	60	16,5	34,5
		CCCCBB	60	60	60	60	33	33	34
		CCCCBA	60	60	60	60	33	16,5	33,9
		CCCCAA	60	60	60	60	16,5	16,5	33,8
		CCCBBB	60	60	60	33	33	33	33,3
		CCCBBA	60	60	60	33	33	16,5	33,2
		CCCBAA	60	60	60	33	16,5	16,5	33,1
		CCCAAA	60	60	60	16,5	16,5	16,5	33
		CCBBBB	60	60	33	33	33	33	32,7
		CCBBBA	60	60	33	33	33	16,5	32,6
		CCBBAA	60	60	33	33	16,5	16,5	32,5
		CCBAAA	60	60	33	16,5	16,5	16,5	32,4
		CCAAAA	60	60	16,5	16,5	16,5	16,5	32,3
		CBBBBB	60	33	33	33	33	33	32,1
		CBBBBA	60	33	33	33	33	16,5	32
		CBBBAA	60	33	33	33	16,5	16,5	31,9
		CBBAAA	60	33	33	16,5	16,5	16,5	31,8
		CBAAAA	60	33	16,5	16,5	16,5	16,5	31,7
		CAAAAA	60	16,5	16,5	16,5	16,5	16,5	31,6
		BBBBBB	33	33	33	33	33	33	31,5
		BBBBBA	33	33	33	33	33	16,5	31,4
		BBBBAA	33	33	33	33	16,5	16,5	31,3
		BBBAAA	33	33	33	16,5	16,5	16,5	31,2
		BBAAAA	33	33	16,5	16,5	16,5	16,5	31,1
		BAAAAA	33	16,5	16,5	16,5	16,5	16,5	31
		AAAAAA	16,5	16,5	16,5	16,5	16,5	16,5	30,9

Table 1: System architecture

Limitation

When designing the application, the limitations of the entire system must be taken into account => *„3.2.2 Electrical system data“*.

2.2 Specified application

T6APD is a modular inverter module system for the control and regulation of three-phase motors, which was developed for the use in different vehicle classes.

The T6APD system is used for the electrification of auxiliary components e.g. in buses, municipal vehicles, construction machinery such as climate and air compressors, hydraulic pumps for servo steering or for drive systems for attachments in the field of agricultural machinery.

In connection with sine-wave filter plus / EMC or sine-wave filter with isolating transformer there is the possibility of mains simulation for the operation of socket consumers. The T6APD is intended for the installation in electrical systems or machines.

The T6APD is a product for commercial use with limited availability in accordance with *DIN EN 61800-3*.

The T6APD meets the requirements of the Low-Voltage Directive. The harmonized standard *DIN EN 61800-5-1* for inverter modules is used. The harmonized standards *DIN EN 61800-3*and *DIN EN 61800-5-1* were used.

The machine directive, EMC directive, Low Voltage Directive, *ECE R10:Rev.5, ECE R100:Rev.2* and other guidelines and regulations must be observed depending on the version.

Technical data and information for connection conditions shall be taken from the nameplate and from the instruction manual and must be strictly observed.

Limitation

If the product is used in vehicles or machines, which work under exceptional conditions or if essential functions, life-supporting measures or an extraordinary safety step must be fulfilled, the necessary reliability and security must be ensured by the customer.

2.2.1 Residual risks

Despite intended use, the inverter module can reach unexpected operating conditions in case of error, with wrong parameterization, by faulty wiring or non-professional interventions and repairs. This can be:

- wrong direction of rotation
- motor speed too high
- motor is running into limitation
- motor can be under voltage even in standstill
- automatic start
- overheating of motors

2.3 Unintended use

Means:

- The COMBIVERT T6APD may not be used as AIC (Active Infeed Controller).
- The COMBIVERT T6APD may not be operated without restrictions on an AIC (Active Infeed Controller).
- Operation outside the limit values specified in the technical data.
- Operation of socket consumers at the output of the module without mains simulation.

Improper use by the customer, user or other third parties leads to the loss of all claims against the manufacturer.

2.4 Overview of the COMBIVERT T6APD

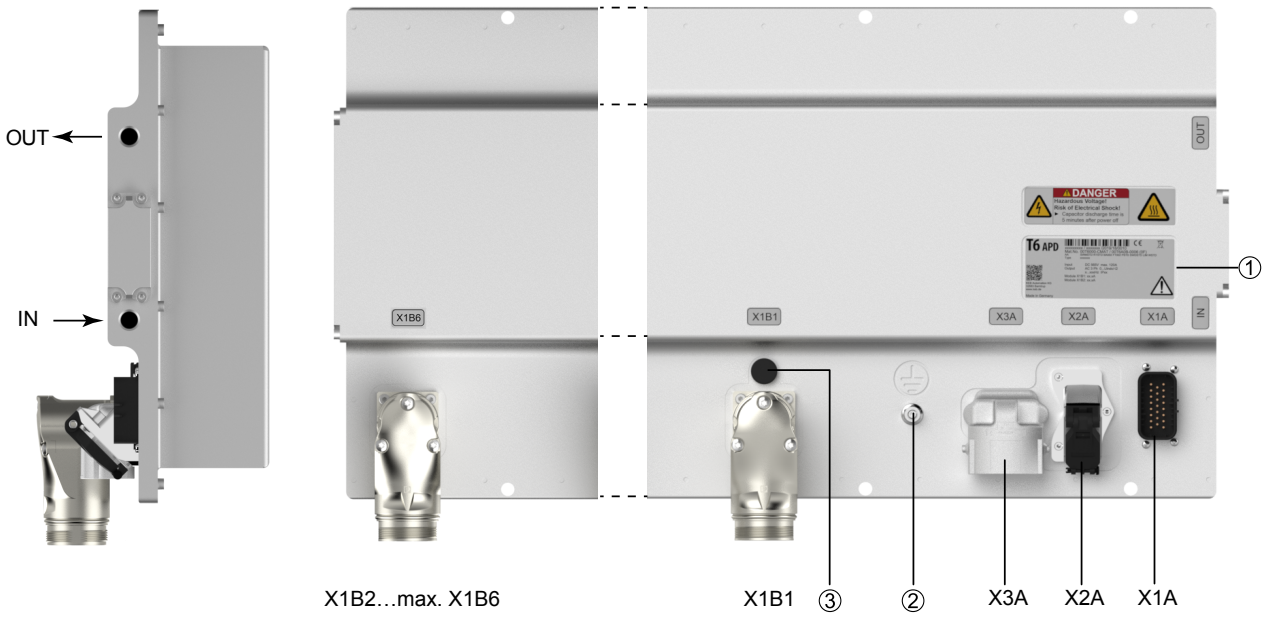

Legend	
1	Nameplate
2	Central ground connection, connection for protective earth, => *„4.3.1.2 Protective earth“*.
3	Pressure compensation valve for the housing
X1A	Connector for control signals, LV-DC input (electrical system), HVIL, CAN and KEB diagnosis
X2A	Ethernet interface RJ45
X3A	HV-DC input
X1B1...X1B6	Motor output, number according to installed inverter modules (max. 6)
IN	Coolant inlet (connection G 1/4)
OUT	Coolant outlet (connection G 1/4)

Figure 2: T6APD - Complete overview

2.5 Nameplate

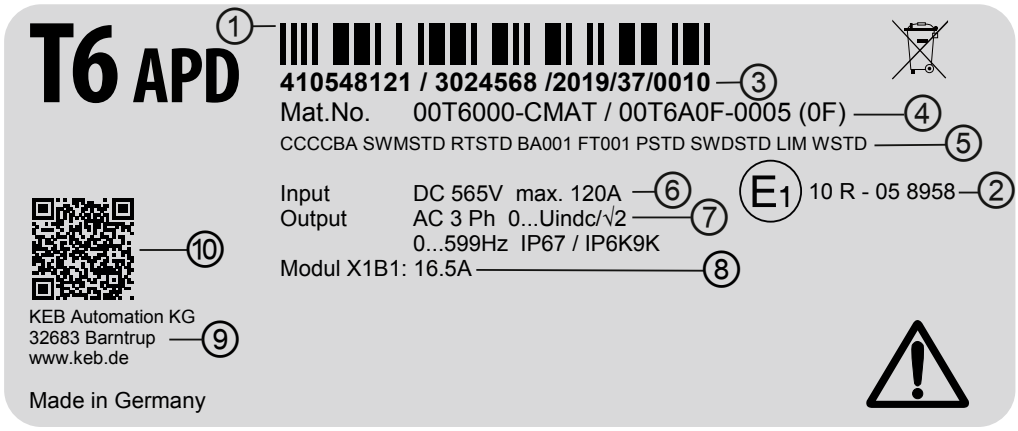

Legend	
1	Barcode with serial number
2	Test mark (CE or E1)
3	Serial number, order number; Year and week of manufacture; Factory
4	Material number, basic unit (=> *„2.7 Type code“) , version number*
5	Options (=> *„2.6 Configurable options“)*
6	Technical data Input
7	Technical data Output
8	Number and maximum current of the integrated modules
9	Manufacturer identification
10	QR code for further documentation

Figure 3: Nameplate

2.6 Configurable options

The following section describes the possibilities of the configurable options:

Features	Feature values	Description
Approval	ATCE, ATE1	CE or E1 acceptance
Basic unit	00T6A0x-xxxx	Material number Basic unit (hardware)
	CBAA [1)]	System configuration modules A, B, C
MCU Firmware	SWMxxx	MCU Firmware
MCU Runtime	RTxxx	CODESYS Runtime licence
APP Utility	BAxxx	Application software - APP Utility: With e.g. J1939 Gateway, power steering pump, air compressor, etc.
APP Pool	FTxx	Object licenses to activate the individual T6 App`s
MCU Files	Pxxx	Download files - e.g. application-specific parameter lists and system configuration ID
DCU Firmware	SWDxxx	DCU Firmware
Release Output frequency	LIM	Limitation to 599 Hz (export restriction)
	ULO	Output frequencies up to 2000 Hz
Warranty	WSTD	Warranty - standard 12 months
	WExx	Warranty extension

Table 2: Configurable options

[1)] *The specified feature value is an example.*

Positions marked with "x" are placeholders for configurable options.

2.7 Type code

x x x x x x x - x x x x

Numbering	Sequential part number
System length	A: 346 mm
	B: 496 mm
	C: 649 mm
	D: 796 mm
	E: 946 mm
	F: 1096 mm
Reserved	0: Default value
Control type	A: KEB default
Series	T6: COMBIVERT T6APD
System	00: System 0 (default)

Table 3: Type code

The type code is not used as order code, but only for identification!

3 Technical Data

3.1 Operating conditions

3.1.1 Evironmental conditions

Storage	Standard	Class	Notes
Environmental conditions	*ISO 16750-4*	Code A	-40…85 °C
Storage height	–	–	Max. 3000 m above sea level
Transport	**Standard**	**Class**	**Notes**
Environmental conditions	*ISO 16750-4*	Code A	-40…85 °C
Operation	**Standard**	**Class**	**Notes**
Ambient temperature	*ISO 16750-4*	Code Z	-30…70 °C
Environmental conditions	*ISO 16750-4*	Code A	-
Coolant inlet temperature	–	–	30…65 °C
Version and degree of protection	*DIN EN 60529*	IP67	Dust-proof, complete protection against contact, protection against temporary submersion
	ISO 20653	IP6k9k	Dust-proof, complete protection against contact, protection against water during high-pressure / steam cleaning
Site altitude	–	–	Max. 2000 m above sea level

Table 4: Evironmental conditions

3.1.2 Mechanical environmental conditions

Storage	Standard	Class	Notes
Vibration limits	*ISO 16750-3*	Code L	Commercial vehicles, sprung mass Frequency 10…2000 Hz, acceleration 57.9 m/s²
Shock limit values	*ISO 16750-3*	Code L	Shock 6 ms, acceleration 500 m/s²
Transport	**Standard**	**Class**	**Notes**
Vibration limits	*ISO 16750-3*	Code L	Commercial vehicles, sprung mass Frequency 10…2000 Hz, acceleration 57.9 m/s²
Shock limit values	*ISO 16750-3*	Code L	Shock 6 ms, acceleration 500 m/s²
Operation	**Standard**	**Class**	**Notes**
Vibration limits	*ISO 16750-3*	Code L	Commercial vehicles, sprung mass Frequency 10…2000 Hz, acceleration 57.9 m/s²
Shock limit values	*ISO 16750-3*	Code L	Shock 6 ms, acceleration 500 m/s²
Pressure in the water cooler	–	–	Rated operating pressure: 2 bar Max. operating pressure: 4 bar

Table 5: Mechanical environmental conditions

3.1.3 Electrical operating conditions

3.1.3.1 Device classification

Requirement		Standard	Class	Notes
System voltage		*DIN EN 61800-5-1* *DIN EN 60664-1* *ISO 6469-3*	300 V	–
Overvoltage category			II	–
				–
Pulse voltage	Basic insulation		2.5 kV	Basic insulation between HV-DC / AC and PE / housing
DC test voltage			2260 V (60 s)	
Pulse voltage	Protective separation		4 kV	Protective separation or reinforced insulation between HV-DC/ AC and LV-DC
DC test voltage			4240 V (60 s)	
Energy (HV-DC to PE)		*ISO 6469-3*	> 0.2 J	–
AC touch current			> 5 mA	–
Pollution degree		–	–	For environmental conditions => *„3.1.1 Evironmental conditions“*

Table 6: Device classification

3.1.3.2 Electromagnetic compatibility

EMC emitted interference	Standard	Class	Notes
Line-conducted interferences	*DIN EN 61800-3*	C1	–
	ECE R10:Rev.5	–	–
	Vo 2015/208		
Radiated emissions	*DIN EN 61800-3*	C1	–
Radiated broadband interferences	*ECE R10:Rev.5*	–	62-52 dB (µV/m) 30…75 MHz 52-63 dB (µV/m) 75…400 MHz 63 dB (µV/m) 400 MHz…1 GHz
	Vo 2015/208		
Radiated narrow band interference	*ECE R10:Rev.5*	–	52-42 dB (µV/m) 30…75 MHz 42-53 dB (µV/m) 75…400 MHz 53 dB (µV/m) 400 MHz…1 GHz
	Vo 2015/208		
Interference Immunity	**Standard**	**Level**	**Notes**
Electromagnetic fields	*ECE R10:Rev.5*	–	–
	Vo 2015/208		
	DIN EN 61000-4-3	10 V/m 3 V/m 1 V/m	80 MHz...1 GHz 1.4...2 GHz 2...2.7 GHz
Cable-fed disturbances	*ECE R10:Rev.5*	–	–
	Vo 2015/208		
Static discharges	*DIN EN 61000-4-2*	8 kV 4 kV	AD (air discharge) CD (contact discharge)
Burst - Ports for process measurement control lines and signal interfaces	*DIN EN 61000-4-4*	1 kV	–
Burst - Power supply interfaces / auxiliary voltage < 60 V	*DIN EN 61000-4-4*	2 kV	–
Surge - auxiliary voltage < 60 V	*DIN EN 61000-4-5*	1 kV	–
Cable-fed disturbances, induced by radio-frequency fields	*DIN EN 61000-4-6*	10 V	0.15...80 MHz

Table 7: Electromagnetic compatibility

3.2 System and module data

3.2.1 System weight

System weight information => *„2.1.1 System architecture“*.

3.2.2 Electrical system data

Electrical system data		
DC input voltage range	$U_{in\_HV\_dc}$ / V	520…750
Limited operation 1	U_{HV1_dc} / V	200…520
Limited operation 2	U_{HV2_dc} / V	750…820
DC rated input voltage	$U_{N\_HV\_dc}$ / V	565
DC switch-off level „Error! Underpotential“	U_{UP_dc} / V	180
DC switch-off level „Error! Overpotential“	U_{OP_dc} / V	820
Rated power	P_N / kW	60
Maximum power for 60s	$P_{\_max}$ / kW	90
DC rated input current	$I_{in\_HV\_dc}$ / A	$\Sigma\ I_{in\_HV\_dc\_drive\ modules} < I_{\_max\_HV\_dc}$
Nominal DC input current	$I_{N\_HV\_dc}$ / A	120
Maximum DC input current for 60s	$I_{\_max\_HV\_dc}$ / A	180

Table 8: Electrical system data

The DC rated input current at the HV DC input corresponds to the sum of the currents of the active drive modules.

NOTICE

Destruction of the drive modules

The individual drive modules must be controlled by way that the maximum DC input current is not exceeded.

NOTICE

Defect due to overload

Protective measures against overload of the HV supply lines and protection for the T6APD system shall be provided.
The following fuse has been tested to protect the T6APD system:
SIBA Part number: 20 713 32.280 (Type aR 900 V DC / 280 A)
Test mains: 750 V DC, SCCR: 30 kA.
To ensure the effectiveness of the protective measures in error case, it is always necessary to consider the entire system in order to determine the appropriate protective measures. Incorrect dimensioning does not ensure the correct response time of the protective devices.

T6APD system	Inverter modules	Capacity against mass in µF	DC precharging capacity in µF	Resistance to mass in MΩ
System length	**Number**	C_{HV_Y}	C_{HV_dc}	R_{off}
A	1	0.82	100	46
B	2	1.64	200	23
C	3	2.46	300	15,3
D	4	3.28	400	11,5
E	5	4.10	500	9,2
F	6	4.92	600	7,7

Table 9: System data

3.2.2.1 Operation at the AIC (Active Infeed Controller)

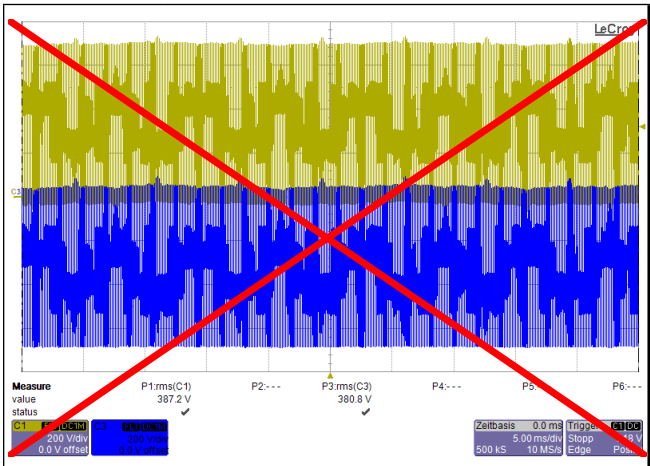

	DC link + to earth
	DC link - to earth

Figure 4: AIC with 7.2% Uk choke filtering

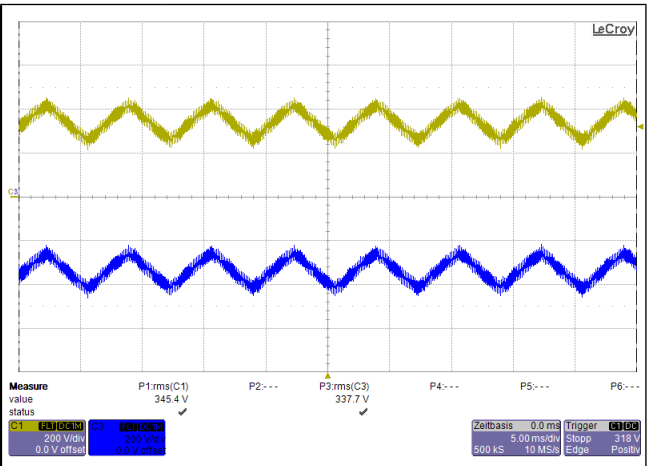

	DC link + to earth
	DC link - to earth

Figure 5: AIC with sine-wave EMC filter

The COMBIVERT T6APD is equipped with DC-HF filters in the DC link. When operating an AIC in DC-bus connection with the COMBIVERT T6APD, the AIC must be operated with a sine-wave EMC filter. No switching frequency depending voltage between DC link + to earth and DC link - to earth may occur. This is shown as example in *„Figure 4: AIC with 7.2% Uk choke filtering“*. When operating on an AIC, KEB must be consulted.

NOTICE

Operation of the COMBIVERT T6APD on an AIC (Active Infeed Controller)

► Consultation with KEB.

3.2.3 Electrical data High Voltage Interlock Loop (HVIL)

The HVIL is designed as short-circuit bridge in the T6APD system. There is no evaluation of the signal loop. Evaluation and reaction is to implement by the customer. For an overview of the connection => *„4.3.1.1 High Voltage Interlock Loop (HVIL) - Exemplary connection“* .

High Voltage Interlock Loop (HVIL)		
DC input voltage range	$U_{in\_HVIL\_dc}$ / V	0…32
Maximum current	$I_{\_max\_dc}$ / A	1
Table 10: Electrical data High Voltage Interlock Loop (HVIL)		

3.2.4 Low Voltage LV-DC input

The LV-DC input supplies the T6APD system at the low-voltage level. This input is equipped with integrated overvoltage protection. The protection against reverse polarity is only given with external fuse.

The protection of the system is prescribed by an external fuse supplied by the customer. The design of the fuse is in the responsibility of the customer.

The T6APD system must be protected with a maximum fuse value of 15 A. It is recommended to use a flat vehicle fuse type Mini or standard.

The voltage range of the following table must be obtained at the system input at the connector.

Starting current note
The internal electrolytic capacitors have no series resistor or a starting current limiting. By way the starting current is essentially determined by the type and length of the connection cable.

Low Voltage LV-DC input			
DC input voltage range	U_{LV_dc} / V	9…32	
DC rated input voltage	$U_{N\_LV\_dc}$ / V	12	24
Max. DC rated input voltage for 60 minutes	$U_{\_max\_LV\_dc}$ / V	36	
DC rated input current	I_{LV_dc} / A	$I_{LV\_dc} = P_{LV\_dc} / U_{N\_LV\_dc}$	
Power input	P_{LV_dc} / W	=> *„Table 12: Power input of the modules“*	
Max. fuse value	$I_{\_max\_dc}$ / A	15	
Table 11: Electrical data low voltage DC input			

The total power dissipation in the LV-DC circuit of a T6APD is shown in the following table depending on the system type.

T6APD system	Inverter modules	Length	Power input PLV-DC
System length	**Number**	**in mm**	**in W**
A	1	346	14
B	2	496	24
C	3	646	35
D	4	796	45
E	5	946	55
F	6	1096	65

Table 12: Power input of the modules

3.2.5 Inverter modules A, B, C

Module			A	B	C
Max. rated motor power (asynchronous)		P_{mot} / kW	7,5	15	30
Rated output current at f_S = 8 kHz		I_N / A	16,5	33	60
Output voltage		U_{out} / V	3 x 0…U_{in_dc} / √2		
Output frequency	2)	f_{out} / Hz	0...599		
Output phases			3		
Overload current (60 s)		I_{60s} / %	150 x I_N		110 x I_N
Overload current (1 s)		$I1s$ / %	170 x I_N		125 x I_N
Overcurrent		I_{OC} / %	180 x I_N		133 x I_N
Rated switching frequency		f_{SN} / kHz	8		
Max. switching frequency	3)	f_{S_max} / kHz	16		
Overload current over time		I_{OL} / %	=> *„3.2.5.1 Overload characteristic (OL)“*		
Maximum current		$I_{f0/lfd}$ / %	=> *„3.2.5.2 Frequency-dependent maximum current (OL2)“*		
Power dissipation at rated operation	4)	P_D / W	239	462	808

Table 13: Electrical data of the inverter modules

1) *The protection functions are designed for rated operation with 8 kHz.*

2) *The output frequency is to be limited in such a way that it does not exceed 1/10 of the switching frequency. Units with higher max. output frequency are subject to export restrictions and are only available on request.*

3) *A detailed description of the derating => „3.2.6 Switching frequency and temperature“.*

4) *Rated operation corresponds to U_N = 400 V; f_{SN} ; I_N ; f_N = 50 Hz (typical value).*

The technical data are for 2/4-pole standard motors. With other pole numbers the inverter must be dimensioned onto the rated motor current. Contact KEB for special or medium frequency motors.

3.2.5.1 Overload characteristic (OL)

All drive inverters can be operated for 60 s at rated switching frequency with an utilization according to the data from *„Table 13: Electrical data of the inverter modules“* .

Restrictions:

- The thermal design of the heat sink is based on the rated output current and the maximum surrounding temperature. At high surrounding temperatures and/or high heat sink temperatures (for example, by preceding utilization nearby 100%) the drive inverter can change to overtemperature error before triggering the protective function OL.
- At low output frequencies or switching frequencies higher than the rated switching frequency, the frequency-dependent maximum current can be exceeded before and error OL2 can be triggered => *„3.2.5.2 Frequency-dependent maximum current (OL2)“*.

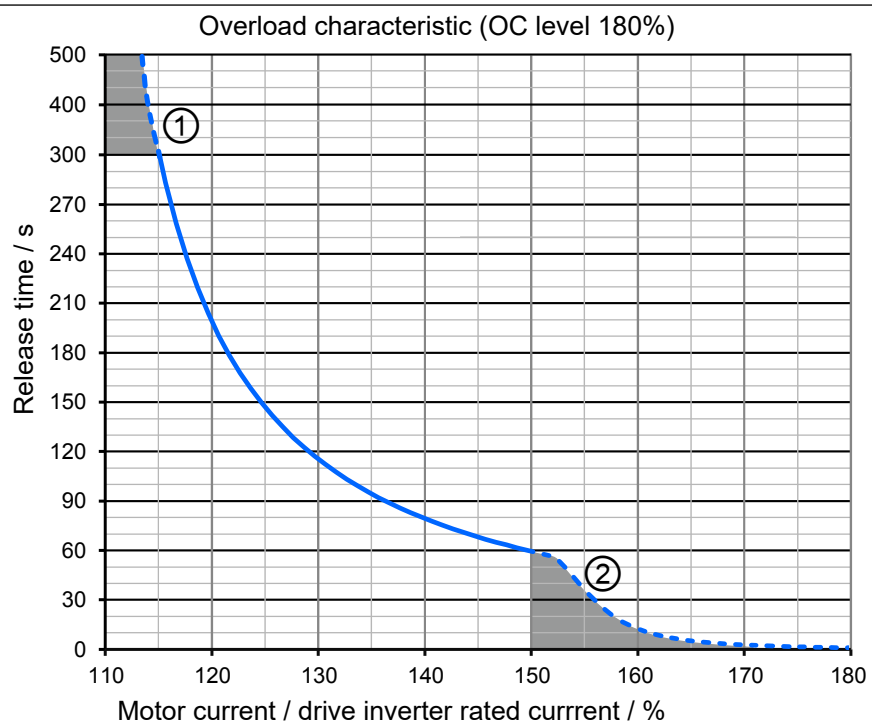

Legend	
1	Thermal overload limit
2	Limitation by the software current limit (the limit can be set with parameter is35)

Figure 6: Switch-off time t depending on the overload I/IN (OL) with the example of module A

On exceeding a load of 105 % the overload integrator starts. When falling below the integrator counts backwards. If the integrator reaches the overload characteristic „Error! overload (OL)“ is triggered.

After a cooling down period, the integrator can be reset now. The drive inverter must remain switched on during the cooling period.

Operation in the range of the thermal overload limit

Due to the high steepness of the overload characteristic, the duration of a permissible overload in this range cannot be determined exactly. Therefore, the design of the drive inverter should be assumed to have a maximum overload time of 300s.

3.2.5.2 Frequency-dependent maximum current (OL2)

The characteristics of the maximum currents for a switching frequency which are depending on the output frequency are different for each drive inverter, but the following rules are generally applicable:

- Lower maximum currents apply for switching frequencies > rated switching frequency.

If error (OL2) shall be triggered on exceeding the maximum currents or if the switching frequency is automatically reduced (derating) can be adjusted in the drive inverter parameters.

The following characteristic curve indicates the permissible maximum current for the output frequency values 0 Hz, 3 Hz, 6 Hz, 12,5 Hz 25 Hz and 50 Hz. Module A is shown as an example.

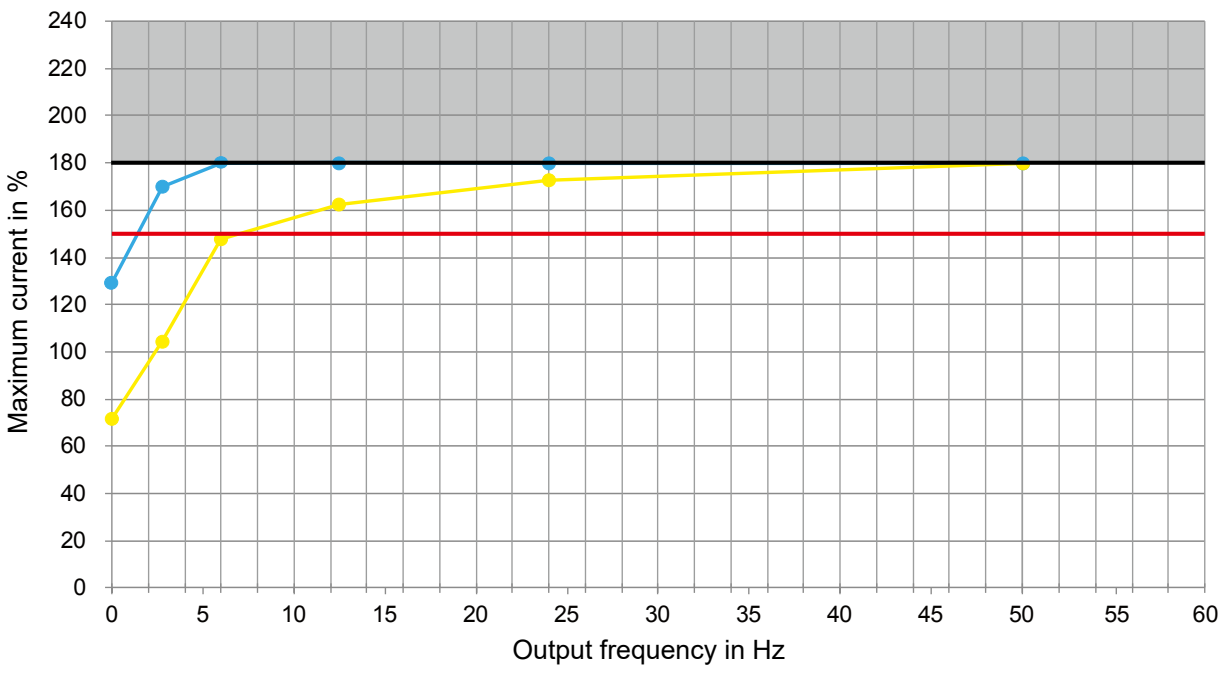

Legend	
	Overcurrent I_{OC}
	Software current limit I_{lim} (the limit can be set with parameter is35)
	Switching frequency 8 kHz
	Switching frequency 16 kHz
	Not available for modulation. Error OC is triggered at 180% overload.

Figure 7: Typical overload characteristic in the lower output frequencies (OL2) Example module A

The frequency-dependent maximum current I_{lim} refers in % to the rated output current I_N.
The current remains constant from the last specified output frequency value.

The values for the respective module are listed in the following tables.

Module			**A**					
Output frequency		**f_{out} / Hz**	**0**	**3**	**6**	**12,5**	**25**	**50**
Frequency-dependent maximum current @ f_S	I_{lim} / %	8 kHz	127	170	180	180	180	180
		16 kHz	73	103	146	164	176	180

Table 14: Frequency-dependent maximum current for module A

Module			**B**					
Output frequency		**f_{out} / Hz**	**0**	**3**	**6**	**12,5**	**25**	**50**
Frequency-dependent maximum current @ f_S	I_{lim} / %	8 kHz	79	109	155	161	167	172
		16 kHz	46	67	94	100	103	106

Table 15: Frequency-dependent maximum current for module B

Module			**C**					
Output frequency		**f_{out} / Hz**	**0**	**3**	**6**	**12,5**	**25**	**50**
Frequency-dependent maximum current @ f_S	I_{lim} / %	8 kHz	60	87	103	110	112	117
		16 kHz	37	53	63	65	68	72

Table 16: Frequency-dependent maximum current for module C

3.2.6 Switching frequency and temperature

The drive inverter cooling is designed by way that the heat sink overtemperature threshold is not exceeded at rated conditions. A switching frequency higher than the rated switching frequency also produces higher losses and thus a higher heat sink heating.

If the heat sink temperature reaches a critical threshold (T_{DR}) the switching frequency can be reduced automatically, in order to prevent that the drive inverter switches off due to overheating of the heat sink. If the heat sink temperature falls below TUR, the switching frequency is increased back to the setpoint. At temperature T_{EM} the switching frequency is immediately reduced to rated switching frequency. "Derating“ must be activated, for this function to work.

Module		A	B	C
Rated switching frequency	[1] f_{SN} / kHz	8		
Minimum switching frequency	[1] f_{S_min} / kHz	8		
Maximum switching frequency	[1] f_{S_max} / kHz	16		
Maximum heat sink temperature	T_{HS} / °C	75		80
Temperature for derating the switching frequency	T_{DR} / °C	65		70
Temperature for uprating the switching frequency	T_{UR} / °C	45		50
Temperature for switching to rated switching frequency	T_{EM} / °C	70		75
Maximum internal temperature	T_{IT} / °C	95		

Table 17: Switching frequency and temperature

1) The output frequency is to be limited in such a way that it does not exceed 1/10 of the switching frequency.

3.2.7 Cooling and coolant connection

Design system	Material	max. operating pressure	Connection
Aluminium heat sink	EN-AW-6060 T66	2 bar	=> *„3.3.7 Connection to the coolant for all housing sizes“*

NOTICE

Deformation of the heat sink by pressure peaks!

Maximum test pressure 4 bar!

- ► Maximum test pressure may not be exceeded briefly by pressure peaks!
- ► Observe Directive 2014/68/EU for pressure equipment!

Observe coolant flow rate

- ► Fall below => no sufficient cooling.
- ► Exceeding => heat sink is washed out.

Coolant connection				
Coolant		Water-glycol (45:55)		
Amount of coolant in the device		The amount of coolant is depending on the system length		
Minimum amount of coolant (system length A)		0.125 l		
Maximum amount of coolant (system length F)		0.410 l		
Coolant inlet temperature [1]	constant, minimum	30°C		
	constant, maximum	65°C		
Minimum volume flow		5 l/min		
Maximum volume flow		15 l/min		
Rated volume flow		10 l/min		
Max. operating pressure in the cooling system		2 bar		
Pressure drop				
Conditions	Ambient temperature	30°C		
	Temperature cooling medium	30°C		
	Cooling medium	Demineralised water mixed with Longlife radiator antifreeze C 040		
Volume flow in l/min		**5**	**10**	**15**
Pressure drop in bar	System length A	0,037	0,126	0,256
	System length B	0,042	0,140	0,284
	System length C	0,051	0,171	0,348
	System length D	0,054	0,180	0,367
	System length E	0,060	0,202	0,412
	System length F	0,066	0,221	0,449

Table 18: Technical data coolant

[1] *The coolant inlet temperature must always be ≥ than the ambient temperature. A temperature difference between drive inverter and ambient temperature can lead to condensation at high humidity. Moisture condensation is dangerous for the drive inverter. The drive inverter can be destroyed through occuring short-circuits. The user must guarantee that any moisture condensation is avoided!*

3.2.7.1 Pressure drops

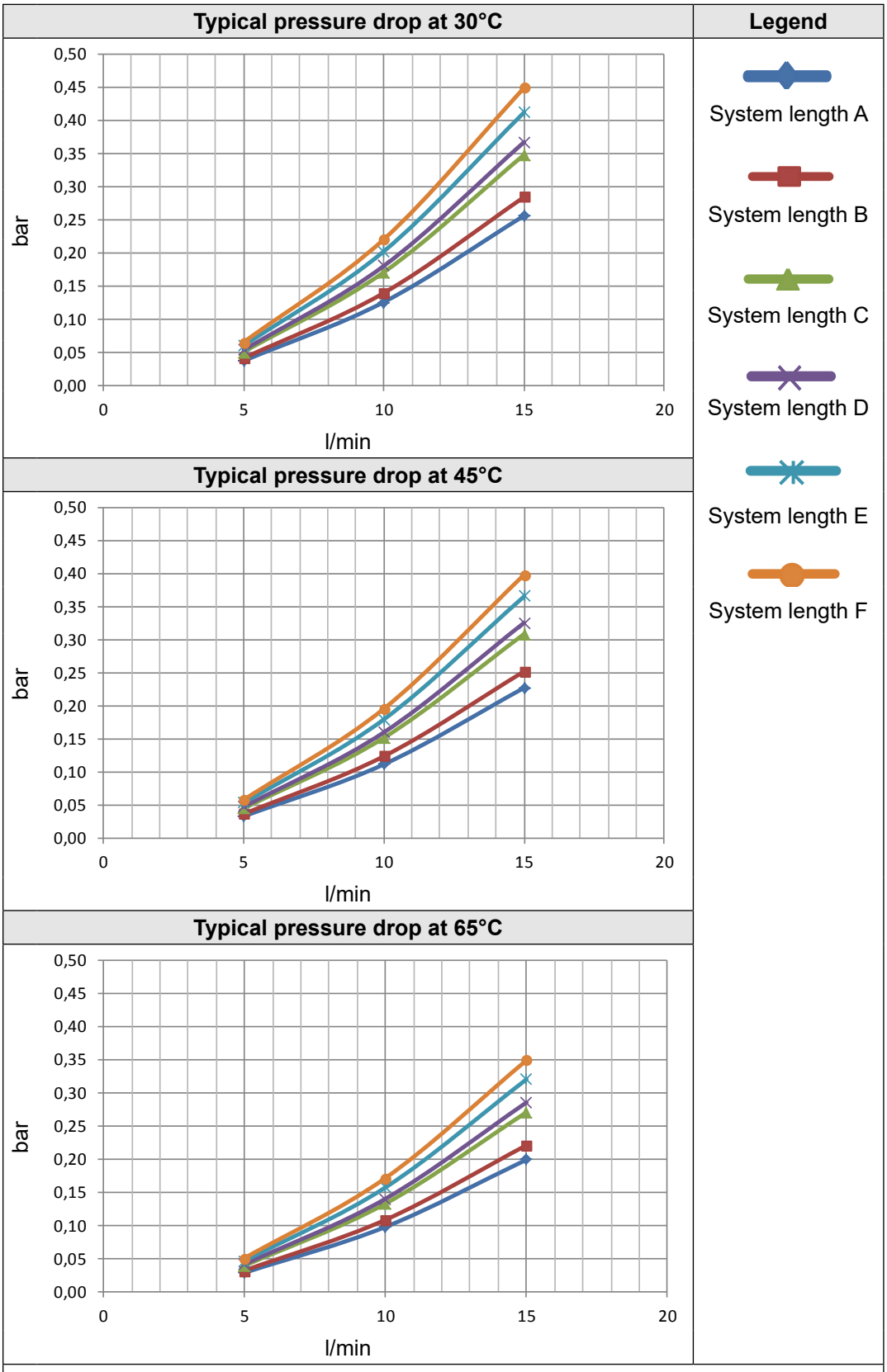

Figure 8: Typical pressure drops

3.2.7.2 Materials in the cooling circuit

Avoid contact corrosion and pitting

For the screw connections and also for the metallic articles in the cooling circuit which are in contact with the coolant (electrolyte) a material is to be selected, which forms a small voltage difference to the heat sink in order to avoid contact corrosion and/or pitting corrosion (electro-chemical voltage series, see the following table). The specific case of application must be checked by the customer in tuning of the complete cooling circuit and must be classified according to the used materials. With hoses and seals take care that halogen-free materials are used.

A liability for occuring damages by wrongly used materials and from this resulting corrosion cannot be taken over!

Material	formed ion	Standard potential	Material	formed ion	Standard potential
Lithium	Li+	-3.04 V	Nickel	Ni2+	-0.25 V
Potassium	K+	-2.93 V	Tin	Sn2+	-0.14 V
Calcium	Ca2+	-2.87 V	Lead	Pb3+	-0.13 V
Sodium	Na+	-2.71 V	Iron	Fe3+	-0.037 V
Magnesium	Mg2+	-2.38 V	Hydrogen	2H+	0.00 V
Titan	Ti2+	-1.75 V	Stainless steel	various	0.2...0.4 V
Aluminium	**Al3+**	**-1.67 V**	Copper	Cu2+	0.34 V
Manganese	Mn2+	-1.05 V	Carbon	C2+	0.74 V
Zinc	Zn2+	-0.76 V	Silver	Ag+	0.80 V
Chrome	Cr3+	-0.71 V	Platinum	Pt2+	1.20 V
Iron	Fe2+	-0.44 V	Gold	Au3+	1.42 V
Cadmium	Cd2+	-0.40 V	Gold	Au+	1.69 V
Cobald	Co2+	-0.28 V			

Table 19: Electrochemical series / standard potentials against hydrogen

3.2.8 Requirements for the coolant

General requirements for the coolant:

VGB Cooling water directive	The VGB cooling water directive (*VGB R 455 P*) contains information on common cooling process techniques. Particulary the interactions between cooling water and components of the cooling system are described.
pH-value	Aluminum is especially attacked by alkalis and salts. The optimum pH-value for aluminum should be in the range of 7.5 to 8.0.
Abrasive substances	Abrasive substances as used in abrasive (quartz sand), clogging the cooling circuit.
Copper cuttings	Copper cuttings can accumulate on the aluminum and lead to galvanic corrosion. Copper should not be used together with aluminum due to the electrochemical voltage difference.
Hard water	Cooling water may not cause scale deposits or loose excretions. It shall have a low total hardness (<20°d) especially carbon hardness.
Soft water	Soft water (<7°dH) corrodes the material.
Frost protection	An appropriate antifreeze must be used for applications when the heat sink or the coolant is exposed temperatures below zero. Use only products of the same company for a better compatibility with other additives.
Corrosion protection	Additives can be used as corrosion protection. In connection with frost protection the antifreeze must have a concentration of 20…25 Vol %, in order to avoid a change of the additives.

Table 20: General requirements for the coolant:

Damages at the unit which are caused by clogged, corroded heat sinks or other obvious operating errors by the customer, user or other third parties leads to the loss of all claims against the manufacturer.

3.3 Mechanical data

3.3.1 Dimensions system length A

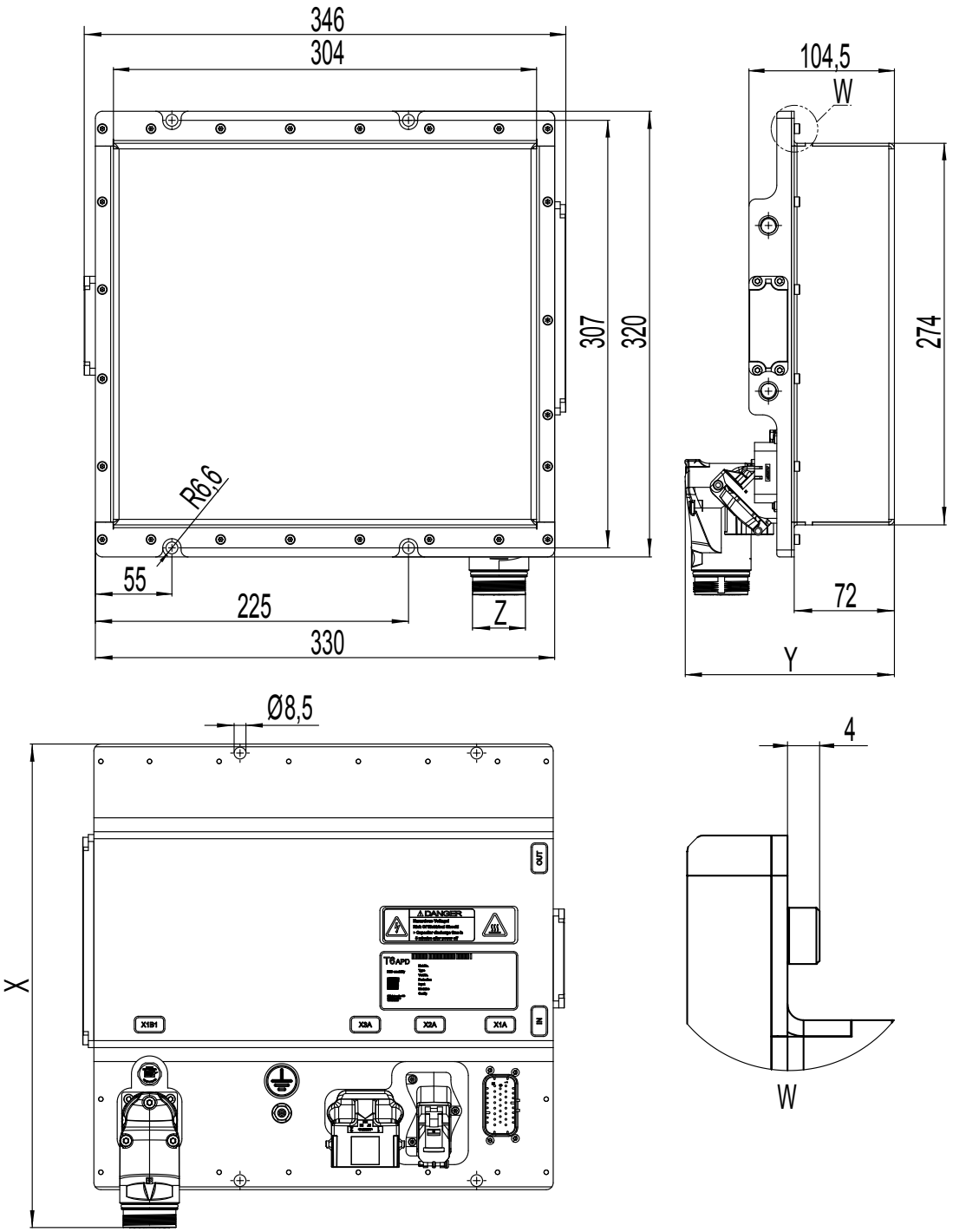

Module	Dimension in mm			Weight in kg
A/B	X: 310	Y: 125	Z: M23 x 1.5	=> *„2.1.1 System architecture“*
C	X: 348	Y: 151	Z: M40 x 1.5	

Figure 9: Dimensions system length A

3.3.2 Dimensions system length B

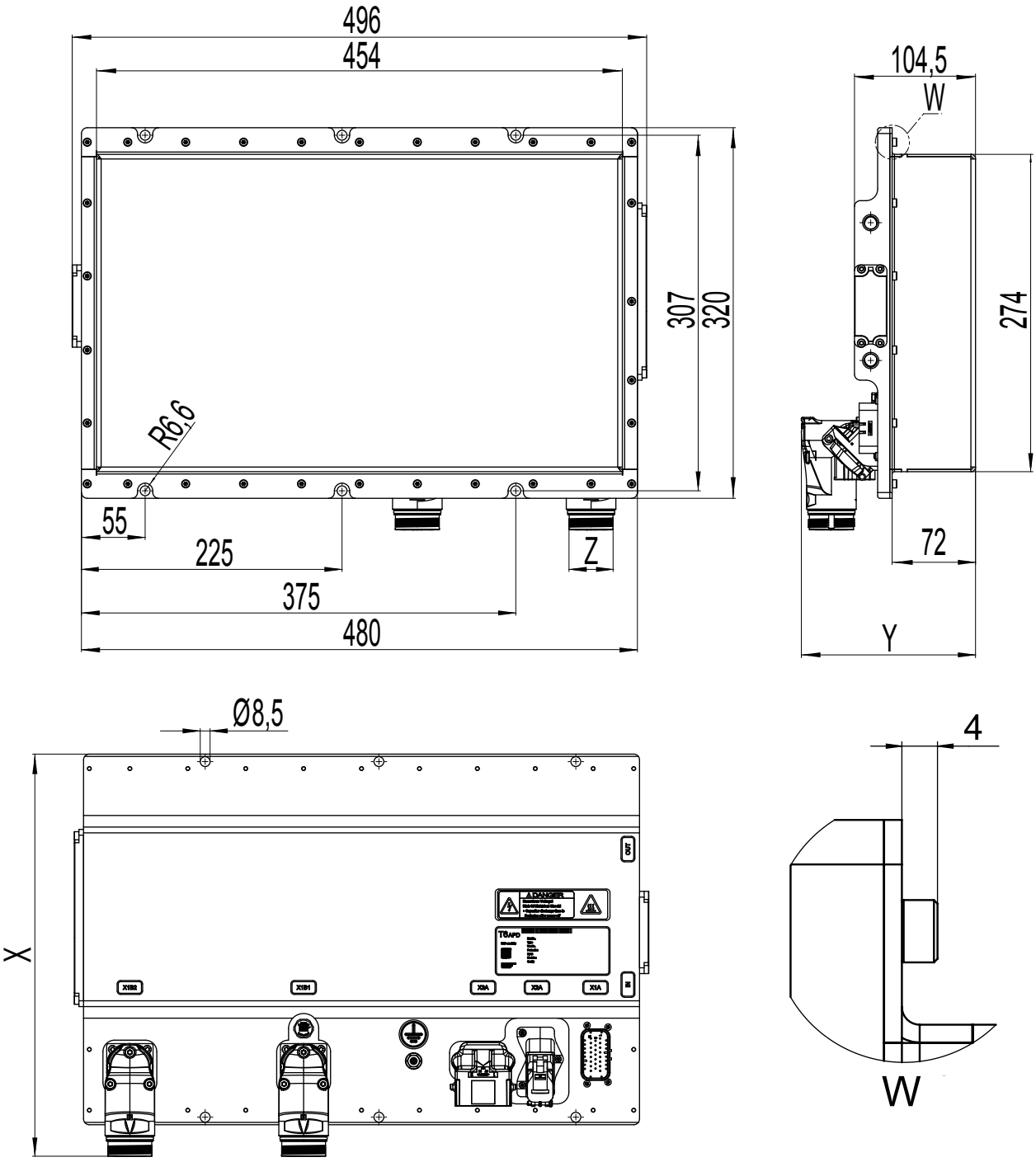

Module	Dimension in mm			Weight in kg
A/B	X: 310	Y: 125	Z: M23 x 1.5	=> *„2.1.1 System architecture“*
C	X: 348	Y: 151	Z: M40 x 1.5	

Figure 10: Dimensions system length B

3.3.3 Dimensions system length C

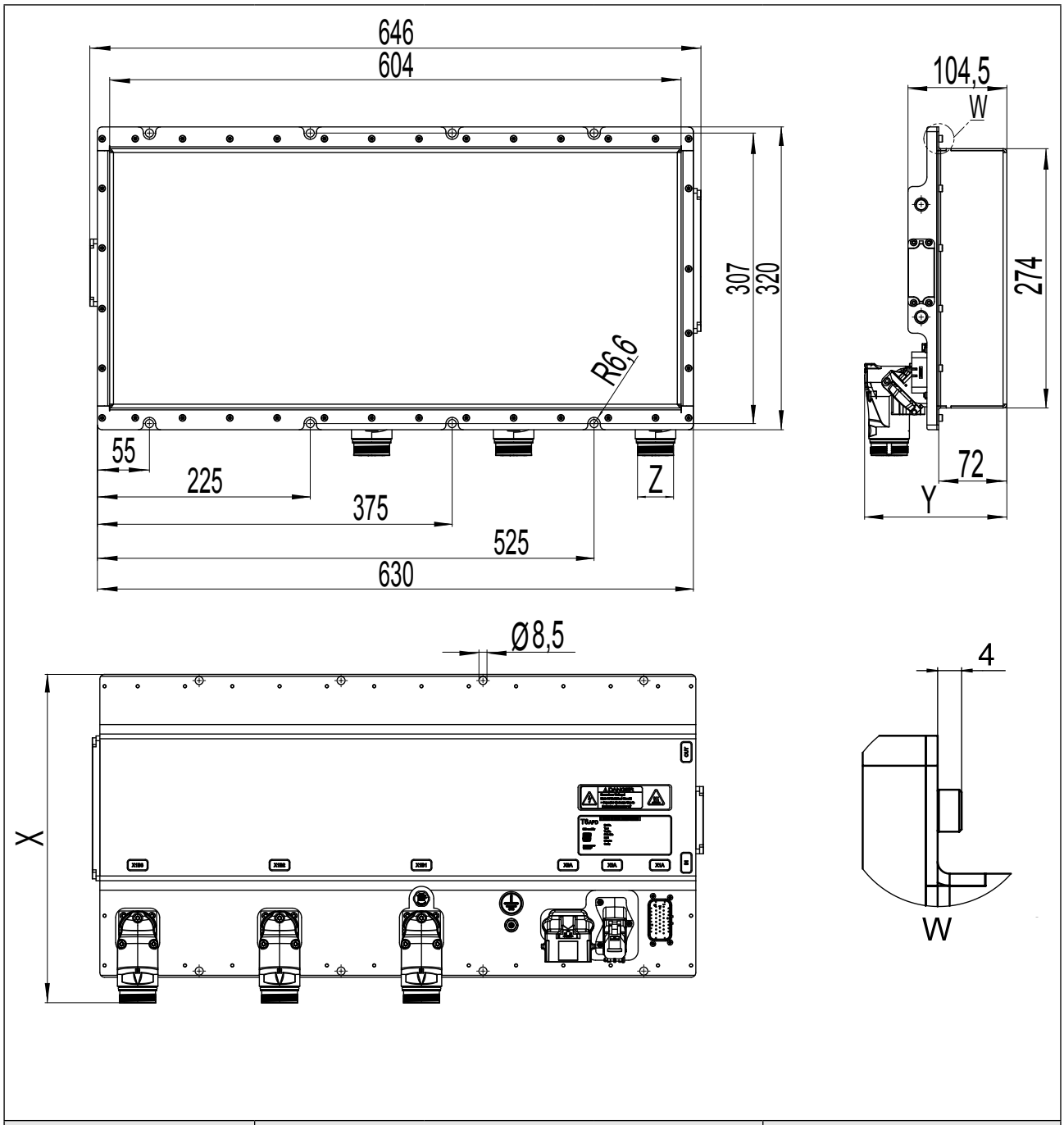

Module	Dimension in mm			Weight in kg
A/B	X: 310	Y: 125	Z: M23 x 1.5	=> *„2.1.1 System architecture“*
C	X: 348	Y: 151	Z: M40 x 1.5	

Figure 11: Dimensions system length C

3.3.4 Dimensions system length D

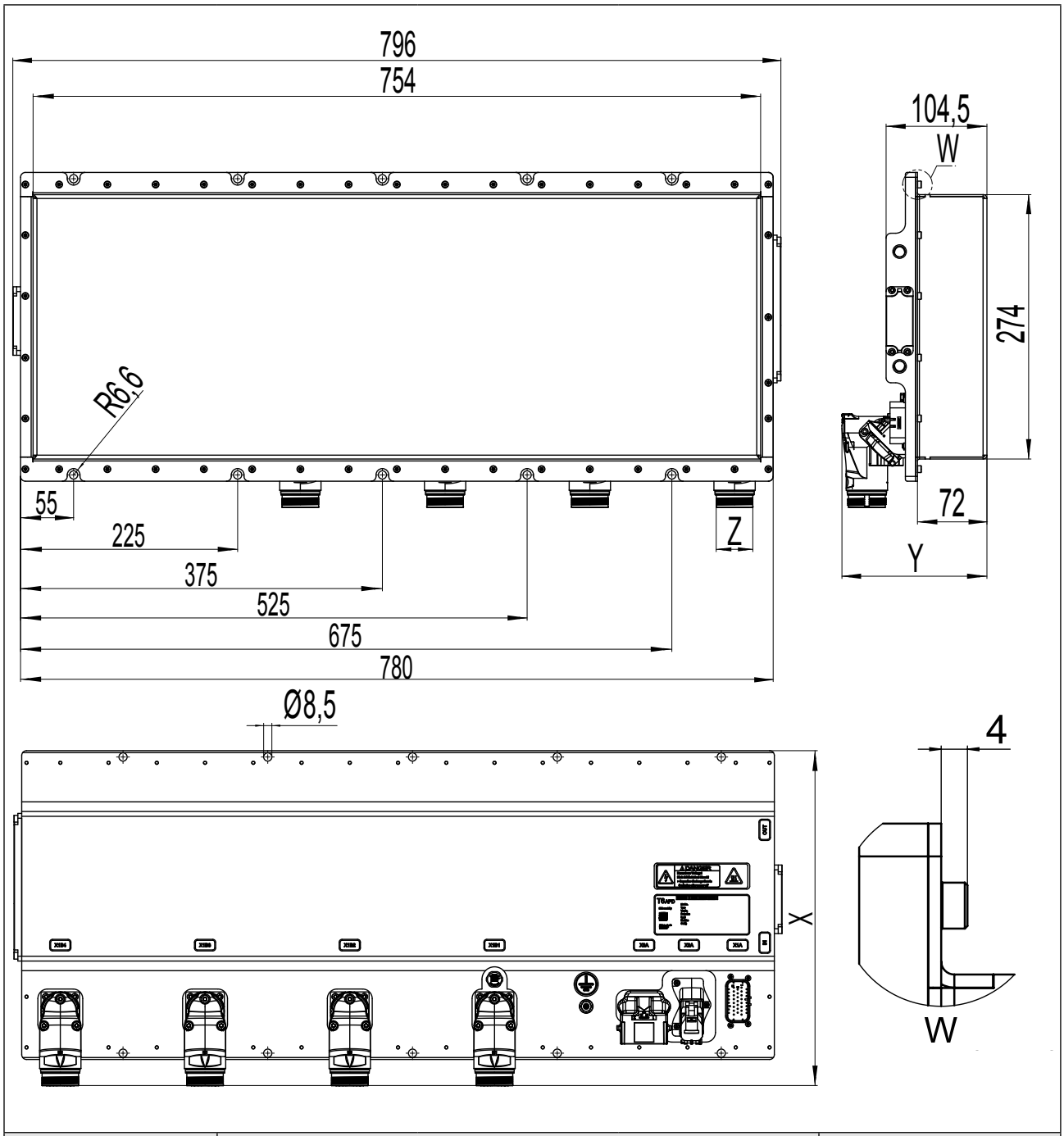

Module	Dimension in mm			Weight in kg
A/B	X: 310	Y: 125	Z: M23 x 1.5	=> *„2.1.1 System architecture“*
C	X: 348	Y: 151	Z: M40 x 1.5	

Figure 12: Dimensions system length D

3.3.5 Dimensions system length E

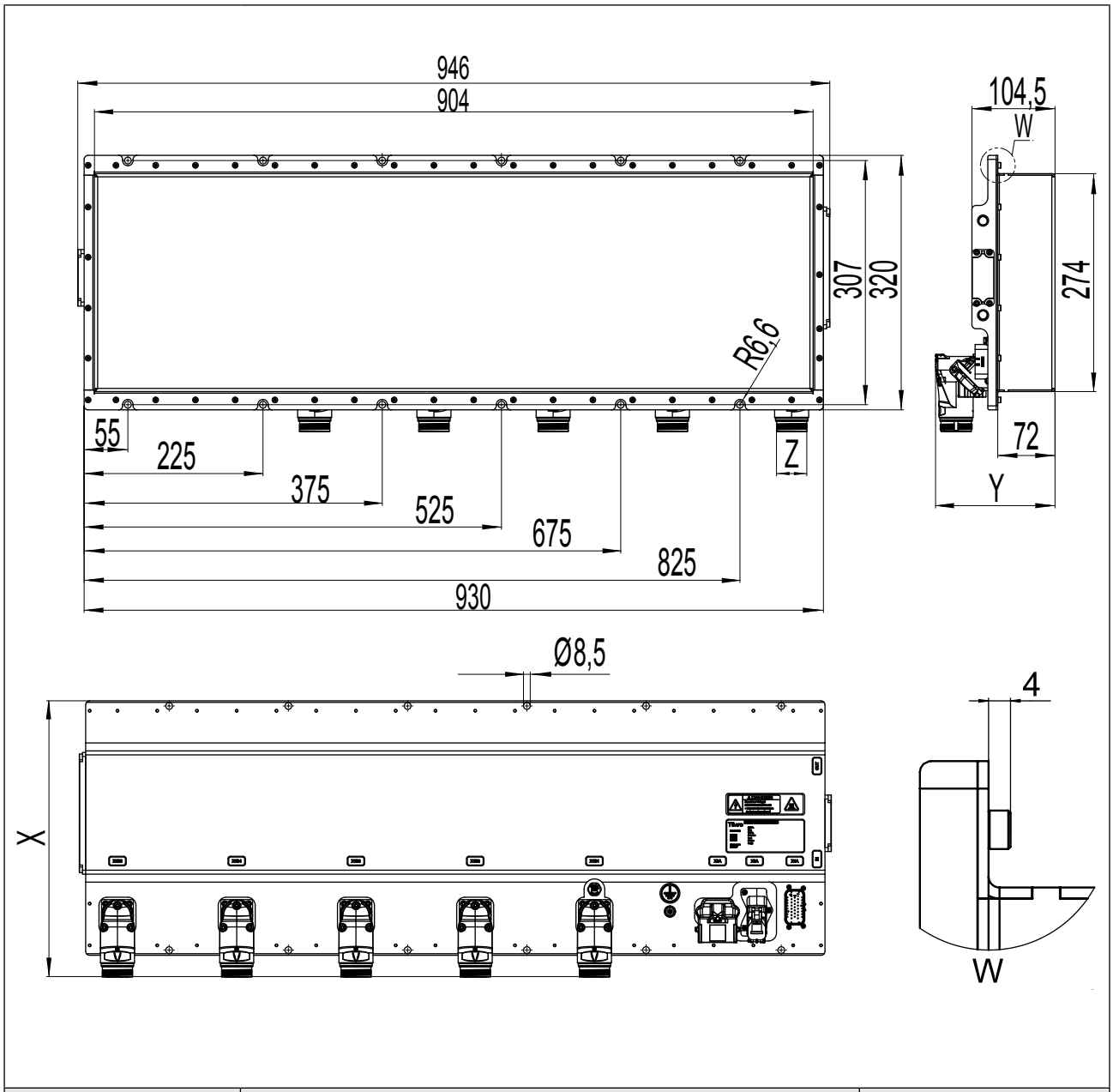

Module	Dimension in mm			Weight in kg
A/B	X: 310	Y: 125	Z: M23 x 1.5	=> *„2.1.1 System architecture“*
C	X: 348	Y: 151	Z: M40 x 1.5	

Figure 13: Dimensions system length E

3.3.6 Dimensions system length F

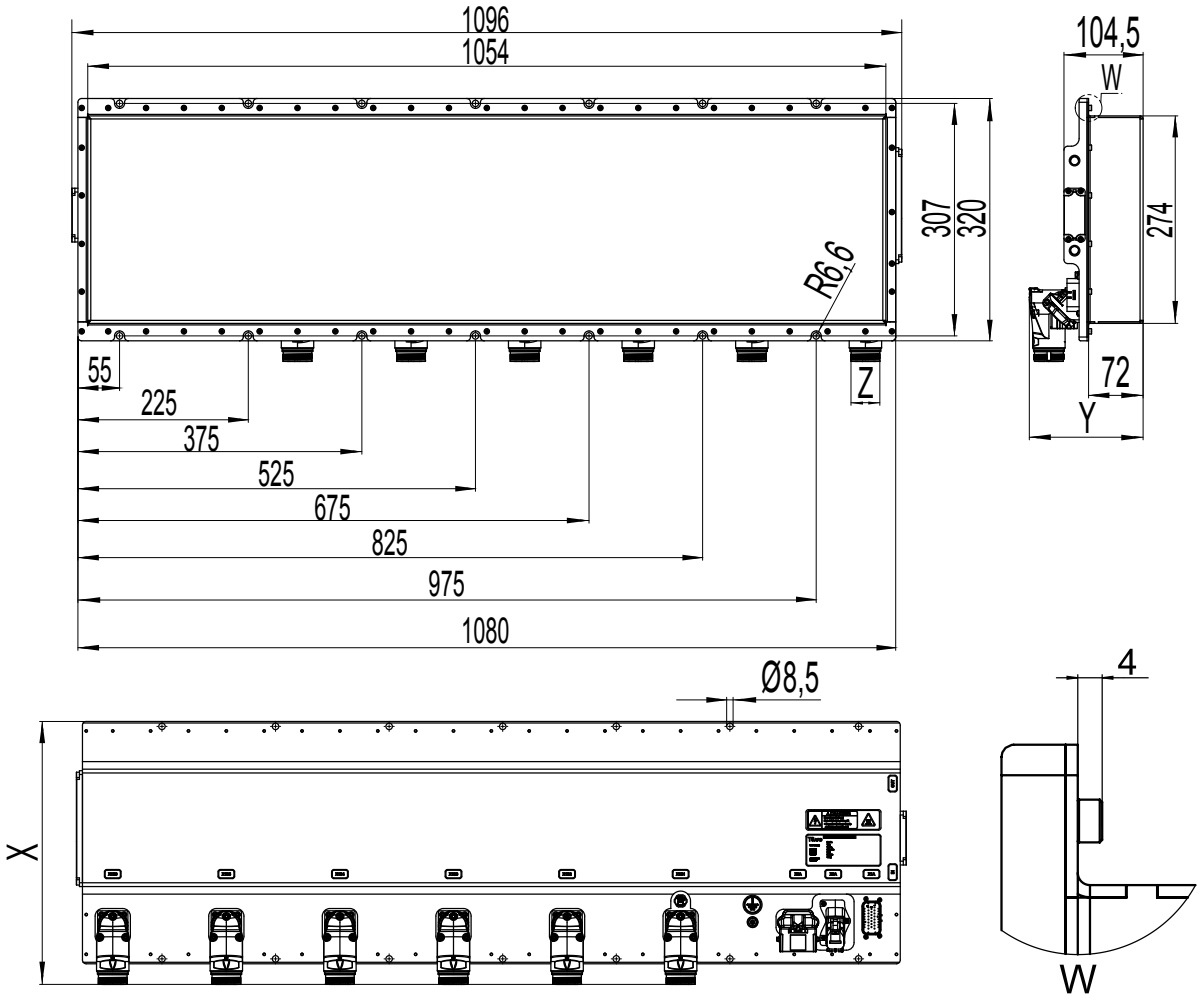

Module	Dimension in mm			Weight in kg
A/B	X: 310	Y: 125	Z: M23 x 1.5	=> *„2.1.1 System architecture“*
C	X: 348	Y: 151	Z: M40 x 1.5	

Figure 14: Dimensions system length F

3.3.7 Connection to the coolant for all housing sizes

NOTICE

Damage to the threads

A pairing of G1/4 internal thread and a conical/tapered external thread is not permitted.

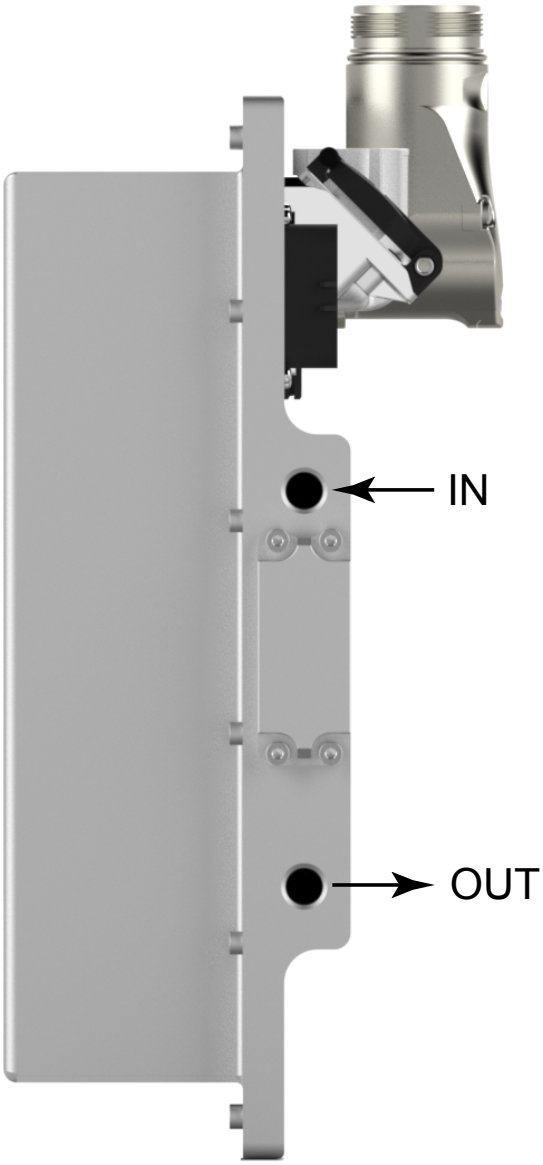

Name	Version
IN	Coolant inlet G1/4
OUT	Coolant outlet G1/4

Figure 15: Connection to the coolant

It is recommended to connect the G1/4 internal thread together with a G1/4 external thread. It is necessary to seal the fitting via the external threading. A suitable sealing element must be used. Metallic seals should be made of the same material as the heat sink. The general manufacturer-specific mounting methods apply for mounting.

4 Installation and Connection

4.1 Mounting

- Use screws M8 *DIN EN ISO 4762* stainless steel A4 80 . Tightening torque 22 Nm ± 1.1 Nm.
- It is recommended to use a medium screw locking varnish for threaded connections which corresponds to the ambient conditions. The general processing requirements of the paint manufacturer apply.

NOTICE

Damage to the housing surface

► Only the specified fastening materials may be used.

► All mounting holes must be used.

In the corner area of the housing cover, heat-affected edges can occur caused by the production. The tightness is also guaranteed at these components.

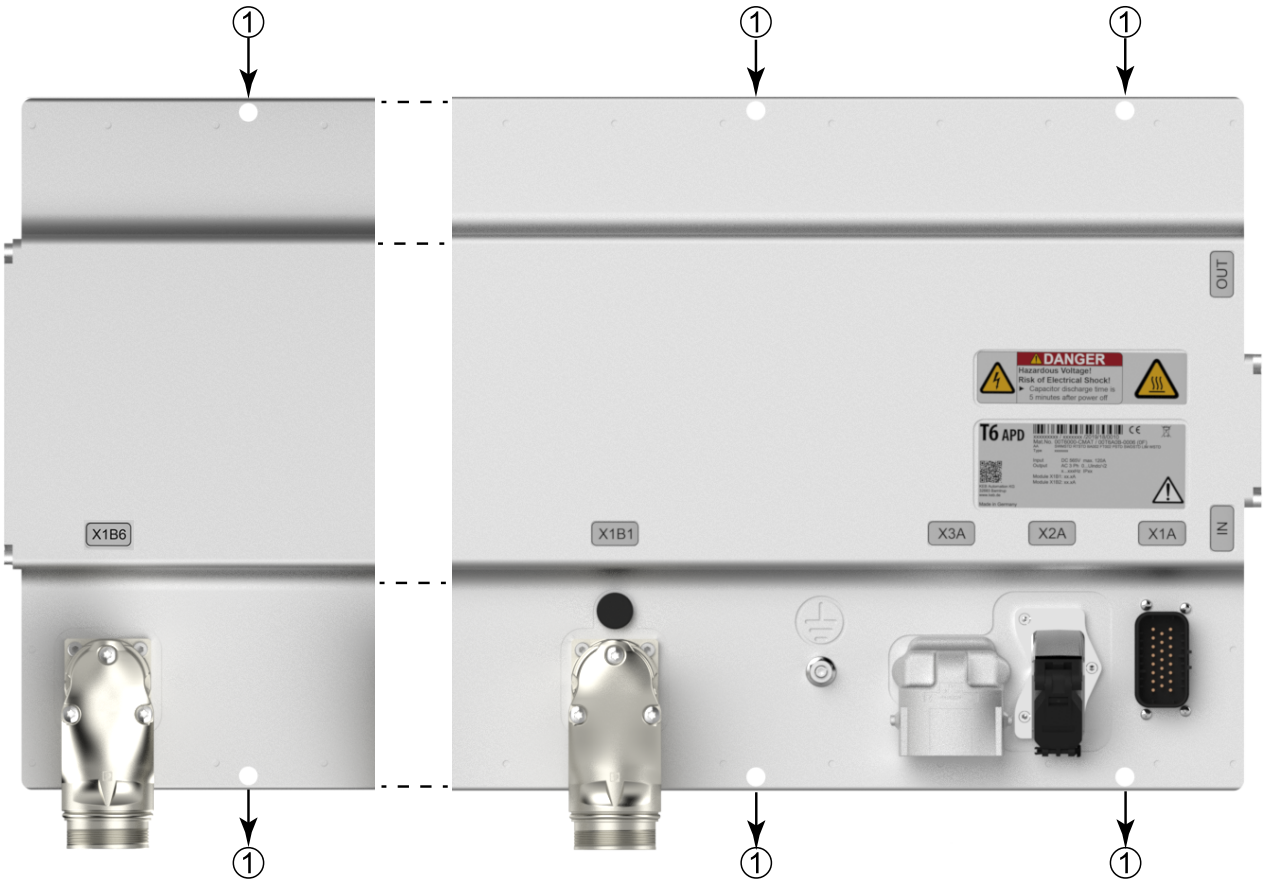

Legend	
1	Holes Ø 8.5 mm (number and position => *„3.3 Mechanical data“*)

Figure 16: Mounting holes

4.1.1 Durchsteckmontage

- It must be worked with a spacer that fits into the recess of the housing cover and bridges the M4 screw head height of min. 4 mm.
- Only the specified fastening materials may be used,
  => *„4.1 Mounting“*.

NOTICE

Damage to the housing cover

► Clamping against the housing cover is not permitted.

► Clamping on the M4 screw heads is not permitted for push-through mounting.

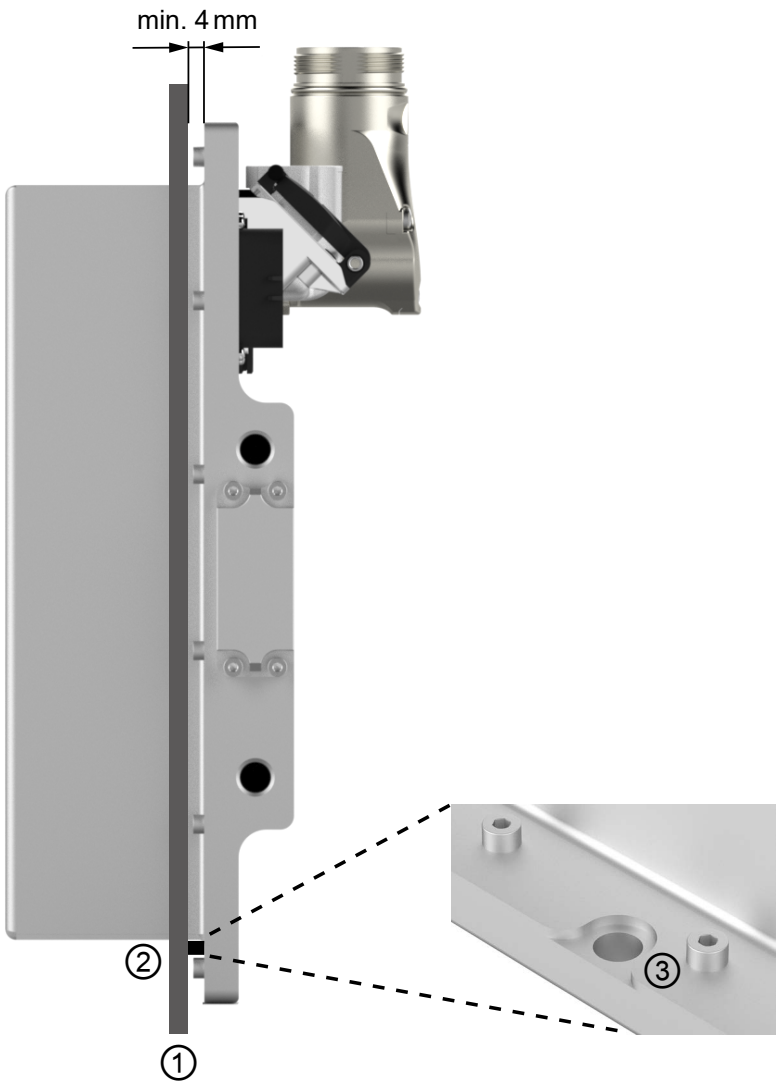

Legend	
1	Mounting wall
2	Fixing with screw and spacer [1] through the mounting wall
3	Recess in housing cover and M4 screw heads

Figure 17: Push-through mounting

[1] *The spacer is not included or available as an accessory.*

4.2 Permissible installation position

The following figure shows all permissible installation positions.

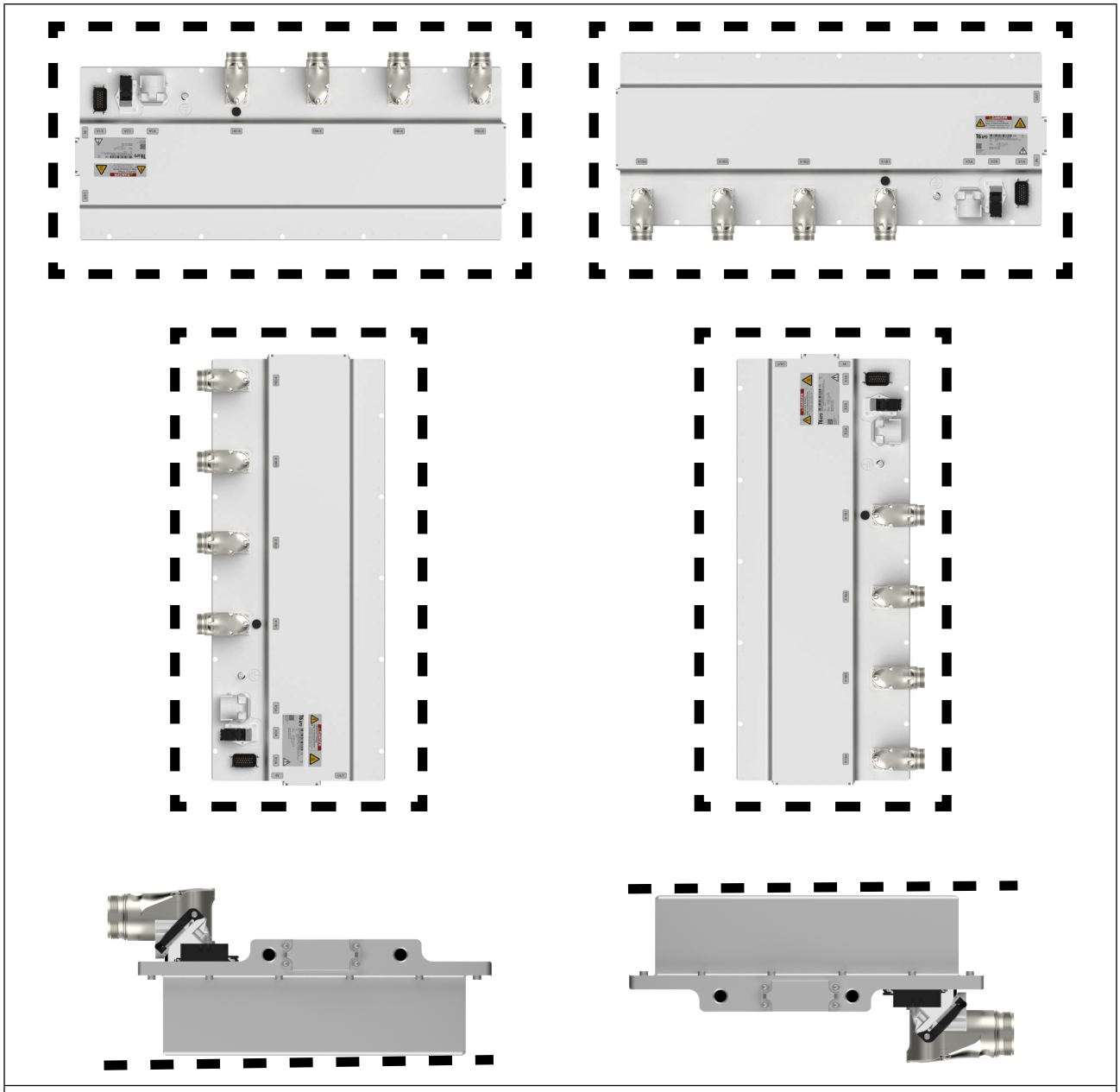

Figure 18: Permissible installation position

4.2.1 External magnetic fields

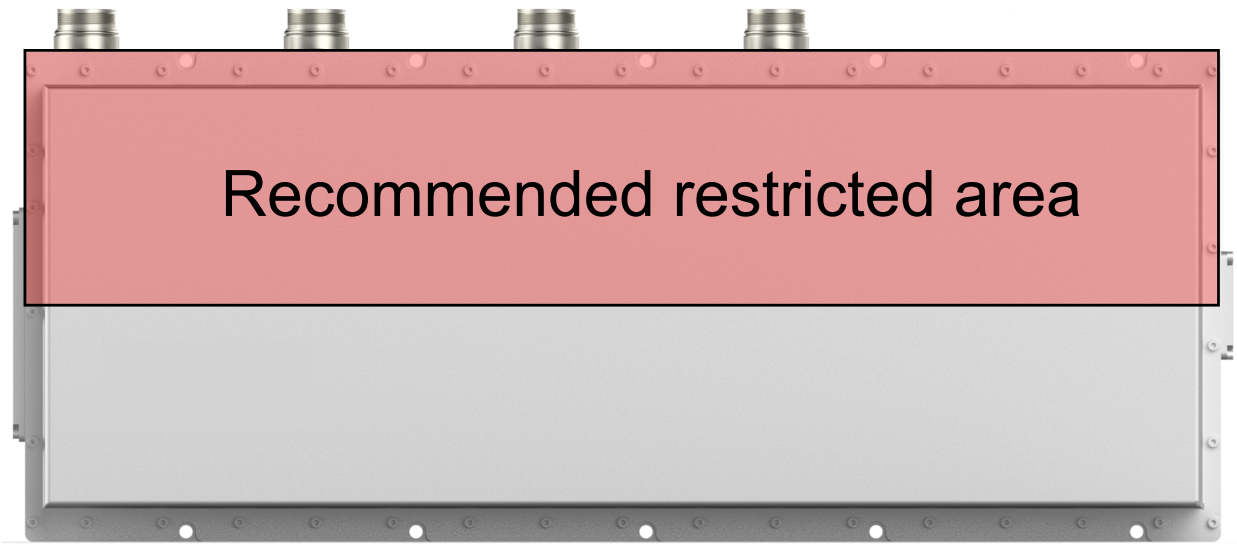

Figure 19: External magnetic fields

NOTICE

Faulty current measurements

External magnetic fields can negatively influence the current measurement. Do not place or lay any

- current-carrying wires
- batteries
- electric motors
- switches
- magnets

in the marked recommended restricted area.

4.3 Connection of the power unit

Use pre-assembled cables

- ► Optimal shield connection to functional earth.
- ► Optimum EMC technical installation.
- ► Compliance with operating conditions.

The IP protection types for the connectors always refer to the mated and locked condition.

4.3.1 High voltage DC supply

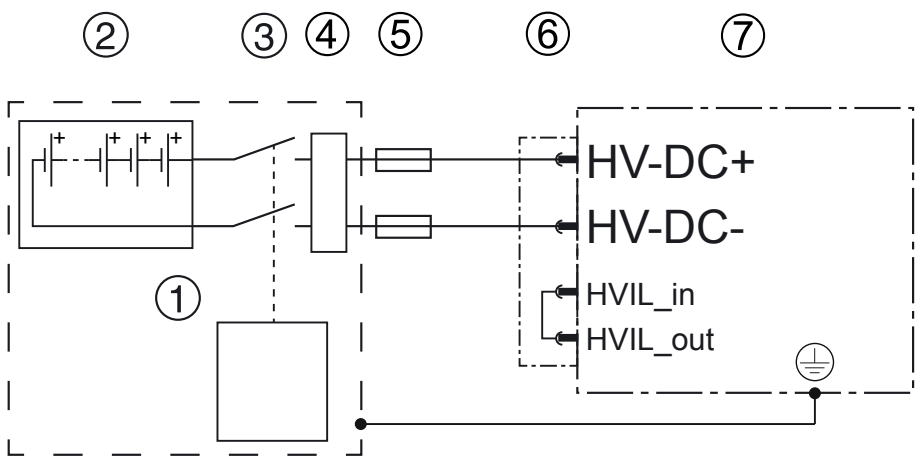

Legend	
1	Vehicle
2	Energy source (e.g. high voltage battery DC 520…750 V)
3	MCCB or relay; control e.g. from HVIL (high voltage interlock) of the vehicle control or insulation monitor
4	Precharging circuit
5	Fuses type aR; pay attention to the permissible voltage range!=> *„3.2.2 Electrical system data“*
6	HV-DC coupling (not included in the scope of delivery)
7	KEB COMBIVERT T6APD

Figure 20: Connection at DC voltage supply

The T6APD must be pre-charged via a appropriate circuit. This is to be carried out, for example, passively with a minimum precharging resistance of 3Ω or actively by means of power electronics. When dimensioning the permissible current of the used DC fuse must be observed. This can lead to a larger minimum precharging resistance.

4.3.1.1 High Voltage Interlock Loop (HVIL) - Exemplary connection

The HVIL

- is led as signal loop through all components of the HV system.
- is a leading contact in the corresponding connectors (pilot contact).
- switches off the contactors of the HV battery when the signal loop is interrupted.
- => *„3.2.3 Electrical data High Voltage Interlock Loop (HVIL)“*

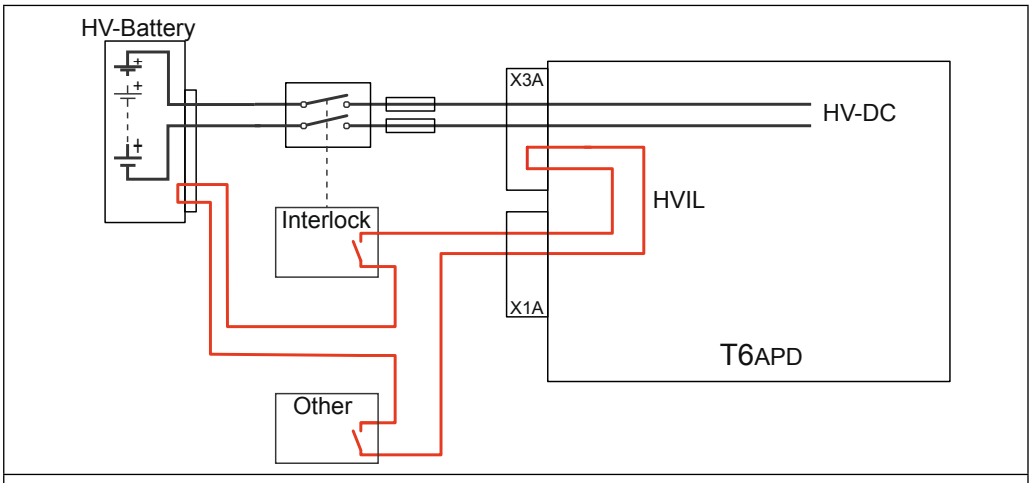

Figure 21: Example of a HVIL wiring

4.3.1.2 Protective earth

The protective earth (PE) serves for electrical safety particularly personal protection in error case. The connection cable of the protective earth should be as short as possible. It is recommended to use a metal-powder tape.

	Name	Function	Cross-section	Tightening torque
	⏚	Protective earth connection	Self-locking nut M6 for ring crimp connector	6 Nm ± 0.3 Nm

Figure 22: Protective earth

4.3.1.3 HV-DC supply X3A

NOTICE

Short circuit due to reverse polarity when assembling the cables!

- ► Observe the view of connector or coupling.
- ► Observe front or rear view.

Parts data HV-DC supply X3A	
Connector manufacturer	Rosenberger
Website	*www.rosenberger.de*
Name	HVR 200; Coupler with HVIL
Part No. pin connector	H2S204-02-000B1-A
Coding pin connector	A

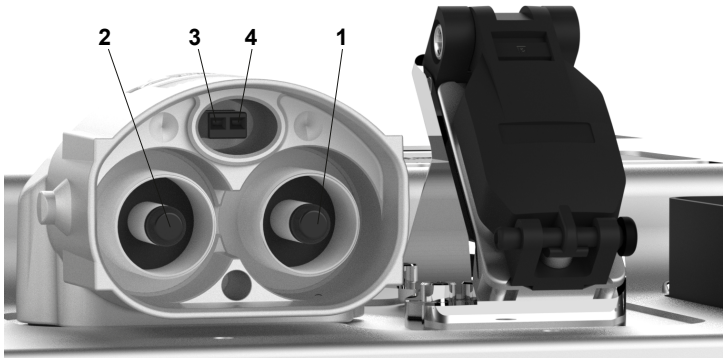

Contact	Name	Description
1	HV-DC +	High voltage DC input +
2	HV-DC -	High voltage DC input -
3	HVIL_in	Is used to open the Interlock Loop
4	HVIL_out	Is used to open the Interlock Loop

Figure 23: HV-DC supply X3A (front view on the device)

Suitable mating connector => *„4.3.1.4 Coupling for HV-DC supply“.*

4.3.1.4 Coupling for HV-DC supply

The following plug-in connection is not included in the scope of delivery. It is assembled by the vehicle manufacturer or directly ordered from the specified manufacturer. It is recommended to lay the HV-DC + and HV-DC - cables together. Only cables approved by the manufacturer must be used.

Manufacturer data accessories	
Connector manufacturer	Rosenberger
Website	*www.rosenberger.de*
Name	HVR 200; Coupler with HVIL
Protection class	IP6K9K, IPXXD, IPX8 (plugged in)
Connection cross section	16 mm², 35 mm² (depending on the design)
Mating cycles	≤ 50
Coding connector	A
Tightening torque according to manufacturer's specification	4 Nm ± 0.4 Nm
Preload force according to manufacturer's specification	< 75 N

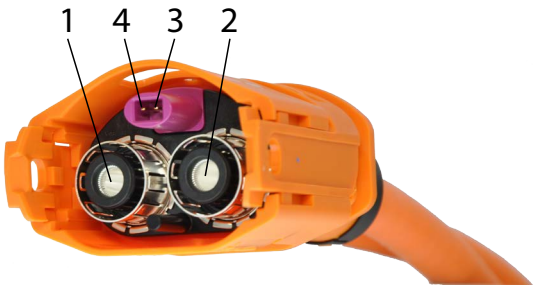

Contact	Name	Description
1	HV-DC +	High voltage DC input +
2	HV-DC -	High voltage DC input -
3	HVIL_in	Is used to open the Interlock Loop
4	HVIL_out	Is used to open the Interlock Loop

Figure 24: Coupling for HV-DC supply (counterpart for X3A)

Manufacturer part number	Cable cross-section
H2K101-W2A035B1-A	35 mm²
H2K101-W2A016B1-A	16 mm²

Table 21: Plug-in connector coding

The indicated article numbers are to be understood as an example.

NOTICE

Defect due to loose plug connection !

► A correct plug-in connection is only given when the plug connector is plugged-in and screwed with tightening torque.

4.3.2 Motor connection

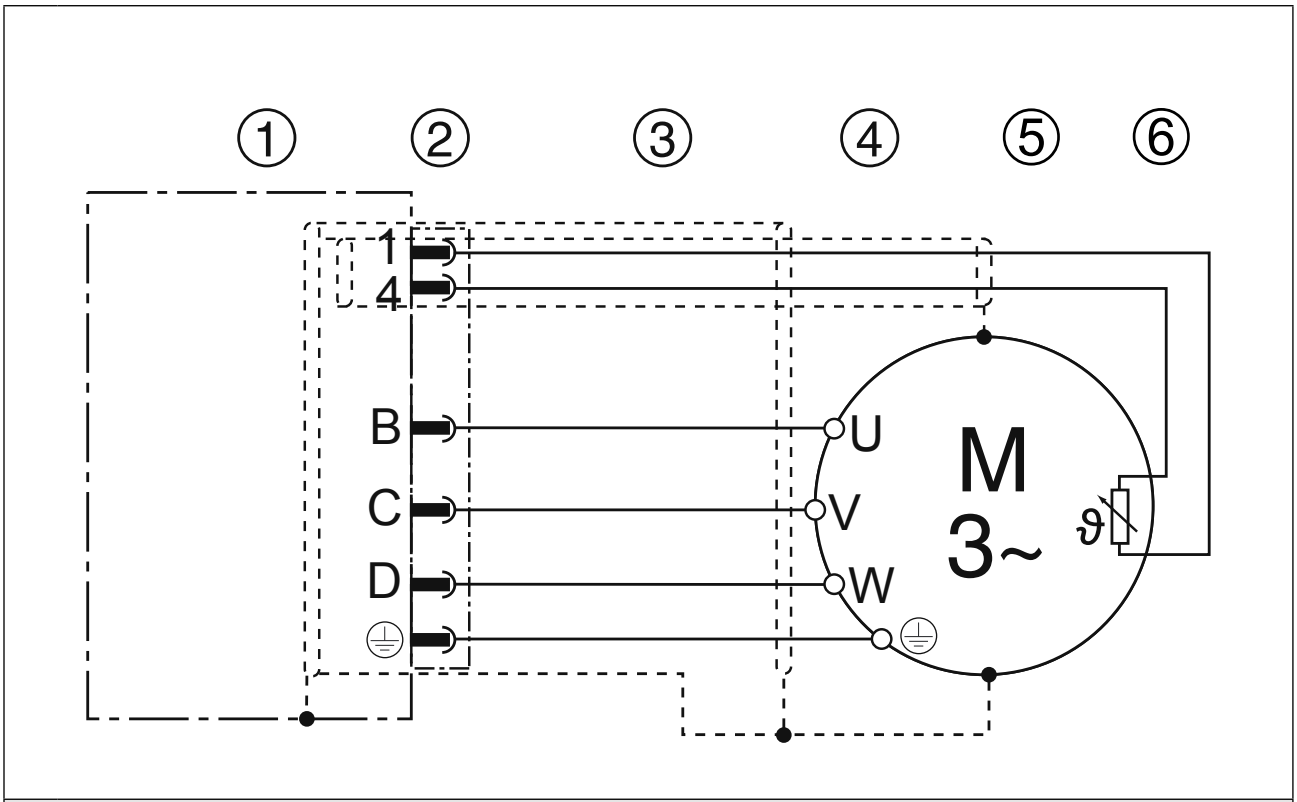

Legend	
1	KEB COMBIVERT T6APD
2	Motor connector (not included in the scope of delivery)
3	Motor cable [1], place the shield on both sides and over a large surface to the functional earth
4	Double shielding, if cable for temperature monitoring is integrated in the motor cable
5	Three-phase motor (observe the connection instructions of the motor manufacturer)
6	Temperature monitoring

Figure 25: Wiring between motor and T6APD

[1] *A low-capacitance cable must be used. The maximum permissible total cable length per connection is 30m.*
=> *„4.3.2.5 Motor cable length“.*

4.3.2.1 Inverter module A and B - socket X1B

Parts data inverter module A and B - socket X1B	
Connector manufacturer	Phoenix Contact
Website	*www.phoenixcontact.com*
Name	Device connector hybrid M23x1.5
Part No. Device connector	1621560
Part No. Crimp contact motor connection	1621578
Part No. Crimp contact temperature monitoring	1618464

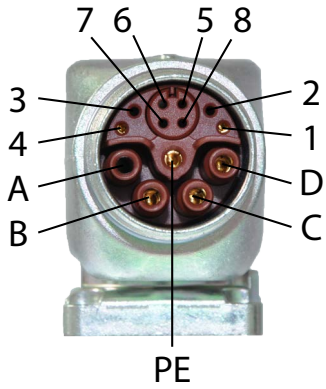

Socket X1B 310° horizontal rotation

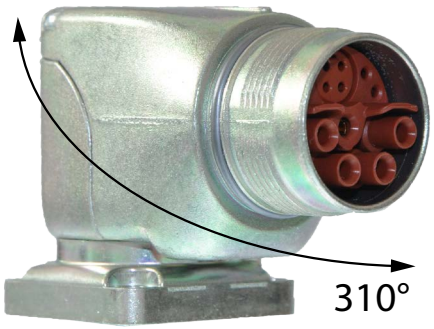

Contact	Description
A	Not assigned
B	Motor connection phase U
C	Motor connection phase V
D	Motor connection phase W
PE	Protective earth connection
1	TA1 temperature monitoring +
4	TA2 temperature monitoring -
2, 3, 5-8	Not assigned

Figure 26: Socket inverter module A and B (front view socket)

An unlocked connector must be closed with a protective cap with IP67 / IP69k.
Part No. Protective cap: Phoenix Contact 1622138.
Suitable mating connector => *„4.3.2.2 Motor connector for inverter module A and B“.*

4.3.2.2 Motor connector for inverter module A and B

The following plug-in connection is not included in the scope of delivery. It is assembled by the vehicle manufacturer or directly ordered from the specified connector manufacturer.

Manufacturer data accessories	
Connector manufacturer	Phoenix Contact
Website	*www.phoenixcontact.com*
Name	Cable connector Hybrid M23x1.5
Number of poles	2+3+PE
Protection class (locked) [1] [2]	IP67, IP6k9k
Mating cycles	≤ 100
Part No. Cable connector	1627077
Cable diameter range cable connector	7.5 mm...18 mm
Part No. Pin contact motor connection	1621581 (is required 4x)
Crimp range motor connection	2.5 mm^2...4 mm^2
Part No. Pin contact temperature monitoring	1618458 (is required 2x)
Crimp range temperature monitoring	0.25 mm^2...1 mm^2

Figure 27: Coupling motor connector for inverter module A and B

[1] *The interface is not waterproof in disassembled state.*

[2] *Water can be transported into the device through a capillary effect of the cable. The opposite side (motor terminal box, motor windings) should be designed in accordance with the necessary IP protection degree.*

The indicated article numbers are to be understood as an example. The crimp contacts suitable for the intended purpose must be approved by the vehicle manufacturer.

4.3.2.3 Inverter module C - socket X1B

Parts data inverter module C - socket X1B	
Connector manufacturer	Phoenix Contact
Website	*www.phoenixcontact.com*
Name	Device connector M40x1.5 hybrid
Part No. Device connector	1623365
Part No. Crimp contact motor connection	1623380
Part No. Crimp contact temperature monitoring	1623605

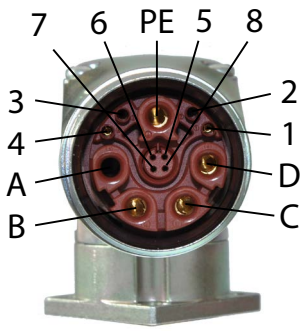

Socket X1B 310° horizontal rotation

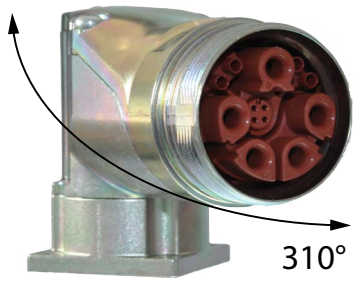

Contact	Description
A	Not assigned
B	Motor connection phase U
C	Motor connection phase V
D	Motor connection phase W
PE	Protective earth connection
1	TA1 temperature monitoring +
4	TA2 temperature monitoring -
2, 3, 5-8	Not assigned

Figure 28: Socket inverter module C (front view socket)

An unlocked connector must be closed with a protective cap with IP67 / IP69k.
Part No. Protective cap: Phoenix Contact 1623827.
Suitable mating connector => *„4.3.2.4 Motor connector for inverter module C“.*

4.3.2.4 Motor connector for inverter module C

The following plug-in connection is not included in the scope of delivery. It is assembled by the vehicle manufacturer or directly ordered from the specified connector manufacturer.

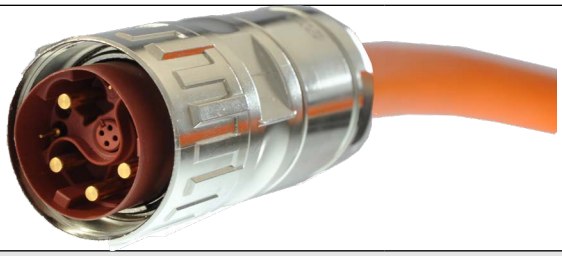

Manufacturer data accessories	
Connector manufacturer	Phoenix Contact
Website	*www.phoenixcontact.com*
Name	Cable connector M40x1,5-Hybrid
Number of poles	2+3+PE
Protection class (locked) [1] [2]	IP67, IP6k9k
Mating cycles	≤ 100
Part No. Cable connector	1627076
Cable diameter range cable connector	20.5 mm - 26.5 mm
Part No. Pin contact motor connection	1623386 (is required 4x)
Crimp range motor connection	16 mm^2
Part No. Pin contact temperature monitoring	1623613 (is required 2x)
Crimp range temperature monitoring	1 mm^2 - 1.5 mm^2

Figure 29: Coupling motor connector for inverter module C

[1] *The interface is not waterproof in disassembled state.*

[2] *Water can be transported into the device through a capillary effect of the cable. The opposite side (motor terminal box, motor windings) should be designed in accordance with the necessary IP protection degree.*

The indicated article numbers are to be understood as an example. The crimp contacts suitable for the intended purpose must be approved by the vehicle manufacturer.

4.3.2.5 Motor cable length

The maximum permissible resulting motor cable length per inverter module is 30 m. Longer cables, standard cables with a larger capacitive coating against shield / PE and cables with much bigger cross-section than required can:

- Reduce the overcurrent capability of the inverter.
- Have a negative influence on the interference behaviour (radiation and cable-fed voltage).
- Damage the device if necessary.

The resulting motor cable length for parallel operation of motors, or parallel installation with multiple cables arises from the following formula:

$$\text{resulting motor cable length} = \sum \text{single cable lengths} \times \sqrt{\text{Number of motor cables}}$$

4.3.2.6 Interconnection of the motor

NOTICE

Incorrect behavior of the motor!

► The connection instructions of the motor manufacturer are always generally valid!

NOTICE

Protect motor against voltage peaks!

► Drive inverters switch at the output with high dV/dt. Voltage peaks that endanger the insulation system at the motor can occur especially in case of long motor cables (>15 m).

NOTICE

Connection of the drive in star connection!

► The star point must not be earthed.

4.3.3 Temperature detection

The COMBIVERT T6APD has implemented a switchable temperature detection. The input has basic isolation. The operating mode can be selected by software. The operating mode can be used for the following functions:

Function	Temperature detection
Motor temperature display and monitoring	KTY84
Motor temperature display and monitoring	PT1000
Motor temperature monitoring	PTC
General error detection	PTC

Table 22: Possible applications of temperature detection

„Basic insulation“ against SELV voltage of the control
A system voltage (Phase – PE) of 300 V is defined. Consequently, the connected sensors also must have a „basic insulation“ to the mains potential (e.g. motor winding).

NOTICE

Disturbances via temperature sensor connection

► Cables for temperature monitoring within the motor cable is only permissible with double shielding!

4.3.3.1 Connection of a KTY sensor

Sensor	Resistance in kΩ	Temperature in °C
KTY84/130	0,498	0
	1	100
	1,722	200

Table 23: Specification of the temperature input

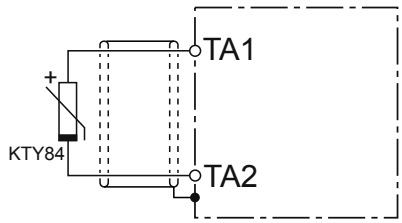

Figure 30: Connection of a KTY sensor

NOTICE

Störungen durch Fehlmessungen

Protection of the motor winding no longer guaranteed.

KTY sensors are poled semiconductors and may

- only be operated in the forward direction(connect the anode to TA1 for this purpose).
- not be combined with other observations.

4.3.3.2 Connection of a PT1000 sensor

Sensor	Resistance in Ω	Temperature in °C
PT1000	1000	0
	1270,75	70
	1385,06	100

Table 24: Specification of the temperature input

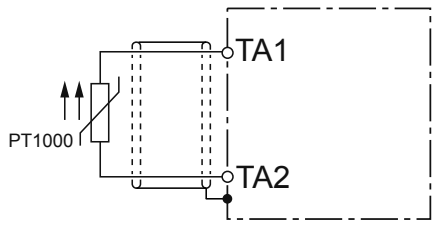

Figure 31: Connection of a PT1000 sensor

NOTICE

Störungen durch Fehlmessungen

PT1000 sensors may not be combined with other detections. Otherwise, incorrect measurements would be the result.

4.3.3.3 Connection of the temperature input in operating mode PTC

Operating mode	Resistance in kΩ	Temperature / state
PTC (in accordance with *DIN EN 60947-8*)	< 0.75	TA1-TA2 closed
	0.75…1.65 (reset resistance)	undefined
	1.65…4 (tripping resistance)	undefined
	> 4	TA1-TA2 open

Table 25: Specification of the temperature input

Thermal contact (NC contact / NC)	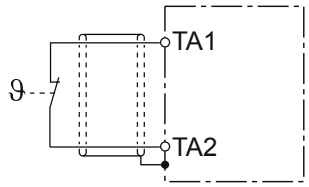
Temperature sensor (PTC)	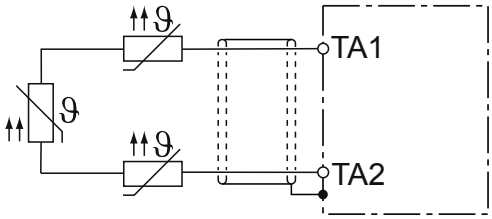
Mixed sensor chain	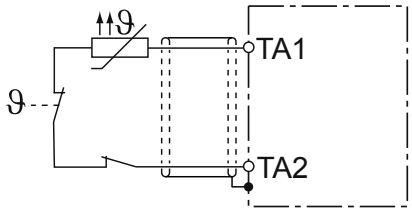

Figure 32: Connecting examples temperature input

4.4 Connection of the control

The following information must be observed when connecting:

NOTICE

Interference due to inductive and capacitive coupling

- ► Lay control and power cable separately (about 10…20 cm distance); Lay crossings in a right angle.
- ► Use twisted bus cable.
- ► Do not lay the cables for temperature monitoring of the motor (also shielded) together with the control cables!

All connections of the connector X1A have "Safe isolation" in accordance with *DIN EN 61800-5-1* and *ISO 6469-3*.

4.4.1 Assignment of the connector X1A

Parts data connector X1A	
Connector manufacturer	TE Connectivity
Website	*www.te.com*
Name	23-pole connector housing
Housing colour	black
Part No.	1-776087-1

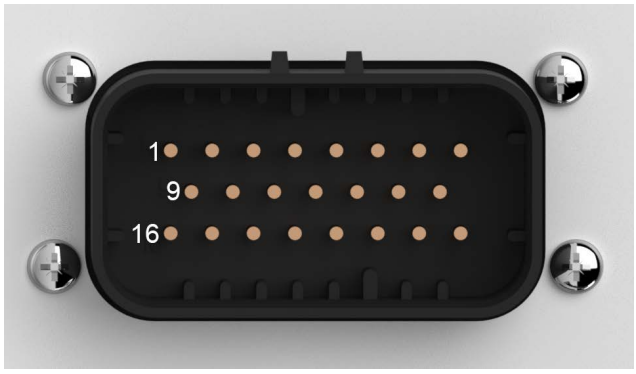

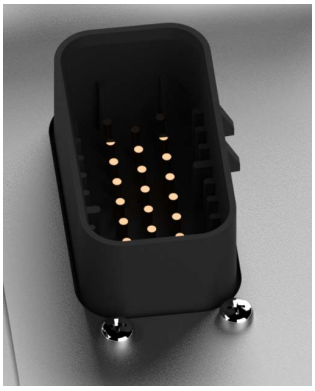

PIN	Name	Description
1	LV_DC_AUX	Low voltage – voltage supply 9-32 V electrical system (KL30g – switched positive cable directly from the battery)
2	LV_GND	Electrical system ground (KL31 – Negative wire directly from the battery or vehicle ground)
3	CAN_H_0	CAN-High Port 0 (CAN 2.0)
4	CAN_L_0	CAN-Low Port 0 (CAN 2.0)
5	CAN_H_0	Connection of additional CAN clients to port 0

continued on the next page

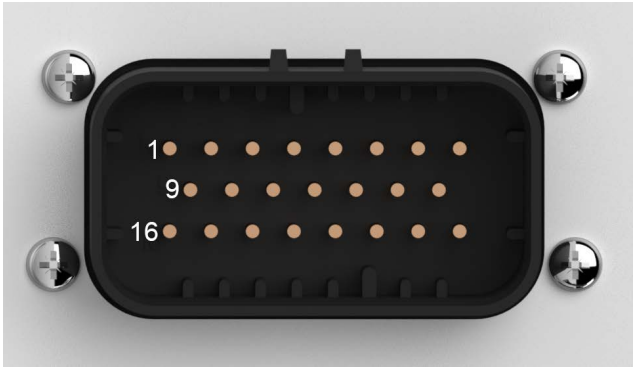

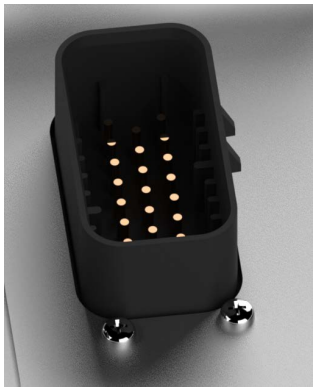

PIN	Name	Description
6	CAN_L_0	Connection of additional CAN clients to port 0 or termination of the CAN interface port 0 (CAN terminating resistor)
7	CAN_H_1	CAN-High Port 1 (CAN 2.0)
8	CAN_L_1	CAN-Low Port 1 (CAN 2.0)
9	EN	Release of the inverter modules – modulation permissible (KL15 – Switched plus from ignition starter switch)
10	reserved	KEB Service interface
11	reserved	
12	reserved	
13	reserved	
14	reserved	
15	reserved	
16	HVIL_IN	Input High Voltage Interlock => *„4.3.1.1 High Voltage Interlock Loop (HVIL) - Exemplary connection“*
17	HVIL_OUT	Output High Voltage Interlock => *„4.3.1.1 High Voltage Interlock Loop (HVIL) - Exemplary connection“*
18	CAN_H_0_R	Connection bridge for termination of the CAN interface port 0
19	CAN_H_1_R	Connection bridge for termination of the CAN interface port 1
20	CAN_L_1	Connection bridge for termination of the CAN interface port 1
21	reserved	KEB Service interface
22	reserved	
23	reserved	

Figure 33: Assignment of the terminal block X1A

Suitable mating connector => *„4.4.2 Connection plug for X1A“.*

4.4.1.1 Terminal 15 „Enable“

Terminal 15 "Enable" is used for modulation release of the COMBIVERT T6APD, i.e. the connected inverter modules can start the operation.

PIN	**X1A.9**			
Reference potential	**X1A.2 (LV_GND)**			
Digital inputs	Status 0		Status 1	
	U_{low} / V	I_{low} / mA	U_{high} / V	I_{high} / mA
max.	6	3	32	20
min.	0	not defined	7	7

Table 26: Specifications of the input „Enable“

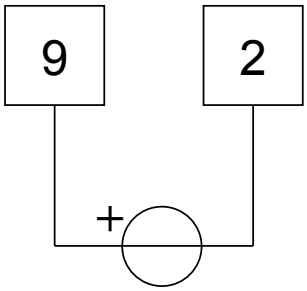

Figure 34: Connection of the input terminal 15 „Enable“

4.4.1.2 Specification of the CAN bus

Interface 0	
CAN-high	X1A.3
CAN-low	X1A.4
Interface 1	
CAN-high	X1A.7
CAN-low	X1A.8
Transmission speed	20, 25, 50, 100, 125, 250, 500, 1000 kbit/s adjustable
Potential separation	Galvanic isolation to the control potential.
Bus termination	120 Ω at both ends of the bus line; at T6APD switchable by external jumper.
Differential resistance in recessive state	≥ 4 kΩ

Table 27: Specifications of the CAN bus

4.4.1.3 Connection example 1 - Connection of the CAN client at T6APD

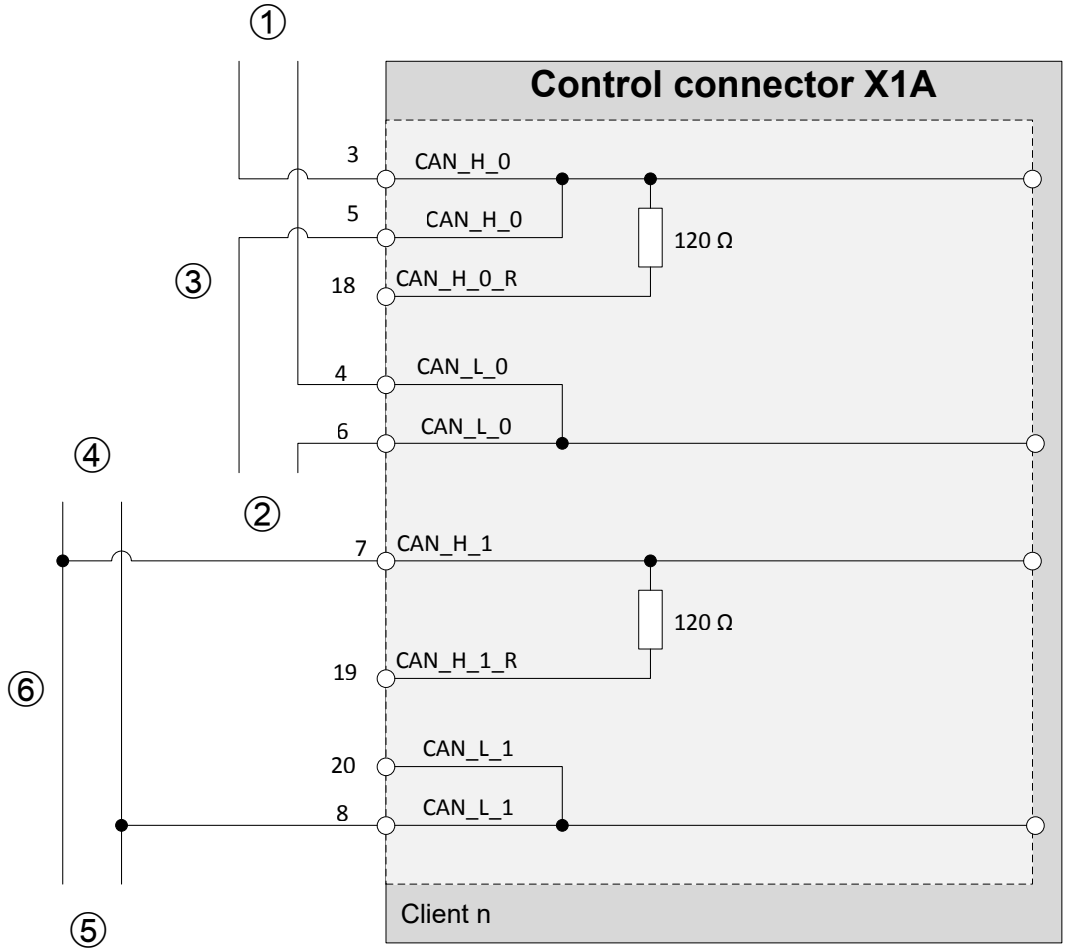

Legend	
1	CAN bus 0 to client n-1
2	CAN bus 0 to client n+1
3	Wiring of additional clients via control plug
4	CAN bus 1 to client n-1
5	CAN bus 1 to client n+1
6	Wiring of the T6APD via spur line

Figure 35: Connection example 1 of the CAN clients at T6APD

4.4.1.4 Connection example 2 - Assignment of both CAN interfaces with T6APD at the end of the respective bus

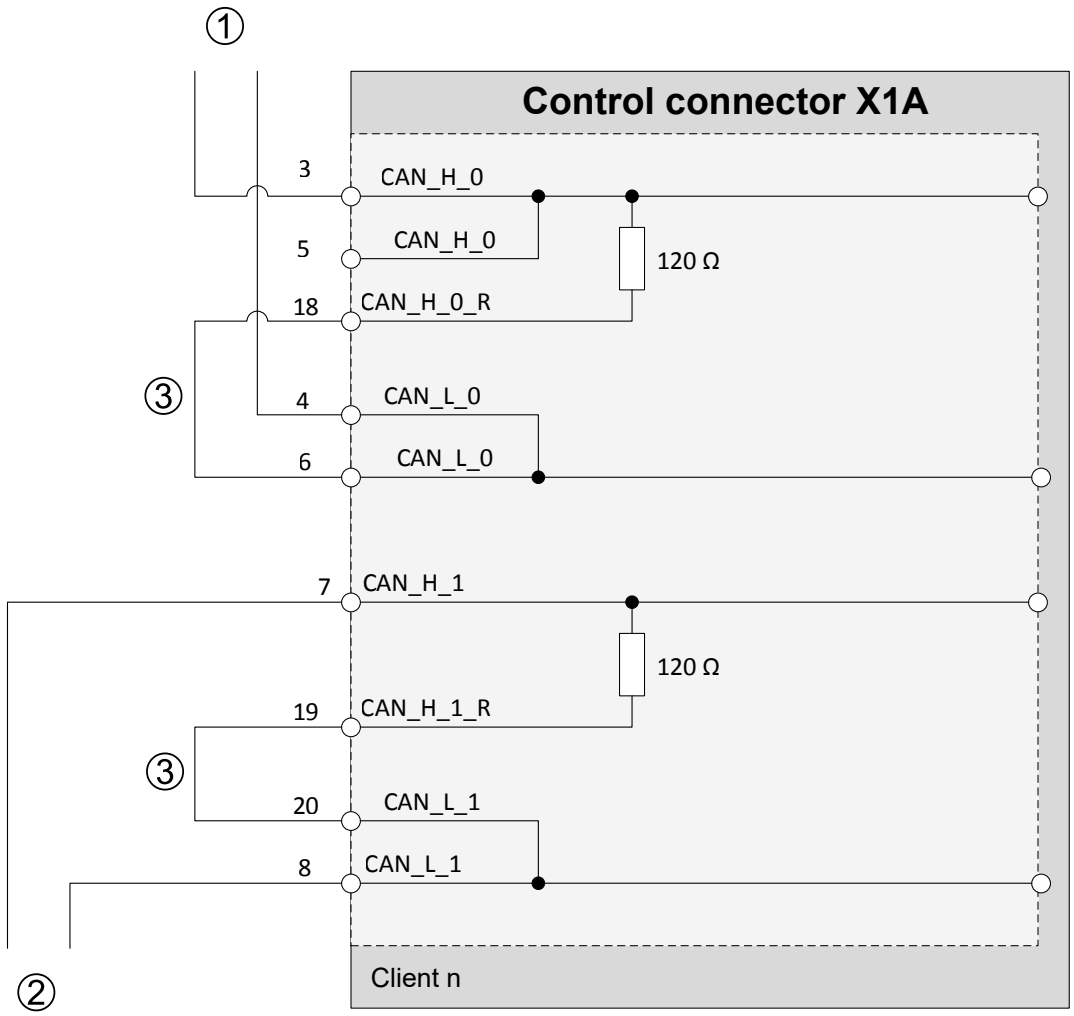

Legend	
1	CAN bus 0 to client n-1
2	CAN bus 1 to client n+1
3	Bridge in the plug-in connector

Figure 36: Connection example 2 Assignment of both CAN interfaces with T6APD

4.4.2 Connection plug for X1A

The following plug-in connection is not included in the scope of delivery. It is assembled by the vehicle manufacturer.

Manufacturer data accessories		
Connector manu-facturer	TE connectivity	
Internet	*www.te.com*	
Name	AMP SEAL PLUG socket	
Part No.	770680-1	
Numbers of pins	23-poles	
Name	Crimp contacts	
Part No.	770854-3	
Cable cross-section according to manufacturer's specification		0.5 mm² - 1.25 mm² / AWG 20-16
Insulation diameter according to manufacturer's specification		1.7 mm - 2.7 mm
Mating cycles		≤ 25
Optional accessories		**Special feature**
Name	Semi-shell	is required 2x
Part No.	776464-1	
Figure 37: Coupling for control connector X1A		

The indicated article numbers are to be understood as an example. The crimp contacts suitable for the intended purpose must be approved by the vehicle manufacturer. Gold-plated crimp contacts must be used.

A minimum cross section of 1 mm² is recommended for terminals X1A.1 and X1A.2.

4.4.3 Bus interface X2A

NOTICE

Defect if not observed !

- The bus interface is not part of the E1 or CE acceptance tests and is not tested.
- May not be connected during operation, is only designed as service interface.
- Must be locked with expanding rivet. The degree of protection can only be maintained in the locked state.

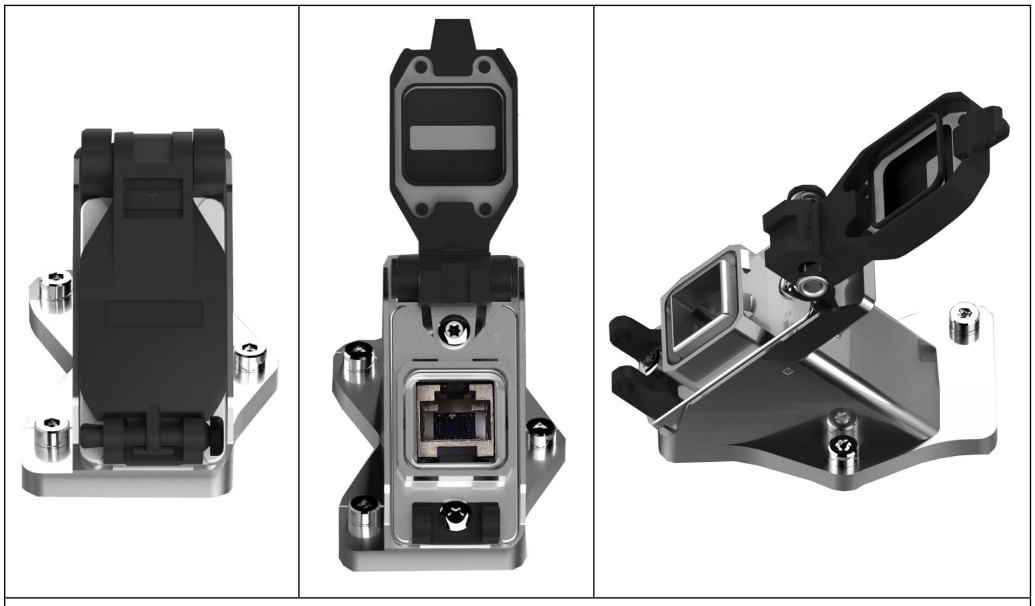

Figure 38: Bus interface X2A

Parts data spreading rivet	
Spreading rivet manufacturer	Fastpoint
Website	*www.fastpoint.de*
Name	Spreading rivet
Part No. Spreading rivet	10770 AA01

Figure 39: Bus interface X2A

4.4.3.1 Assignment of the Ethernet interface X2A

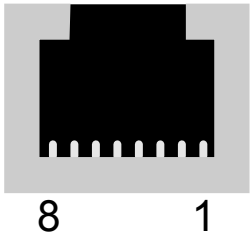

PIN	RJ45 without supply voltage (view with Auto-Cross Over)	
1	TX+	RX+
2	TX-	RX-
3	RX+	TX+
4	reserved	
5	reserved	
6	RX-	TX-
7	reserved	
8	reserved	

Table 28: PIN description RJ45 Ethernet

The IP address for parameterization via the control is
192.168.0.100
Subnet mask 255.255.255.0

5 Certification

ECE R10-/CE certification

Depending on the logo on the nameplate, the device is either ECE R10 or CE certified.

5.1 ECE R10

The COMBIVERT T6APD system has been approved as electrical / electronic sub-assembly in accordance with ECE Regulation No. 10 including Amendment No. 05 Supplement 01 The intended use is the installation in vehicles for the control and regulating of three-phase motors. The drive converter must not be started until it is determined that the installation complies with the applicable legal requirements.

Technical data and information for connection conditions shall be taken from the nameplate and from the instruction manual and must be strictly observed.

E1 10 R - 05 8958	Issued by	Federal Motor Transport Authority DE-24932
	Flensburg	10.12.2019

Table 29: Certification according to ECE Regulation No. 10 including Amendment 05 Supplement 01

5.2 Manufacturer´s declaration

EU DECLARATION OF CONFORMITY

Document No. / month.year: ce_dr_rens-t6-a_en.docx / 09.2019

Manufacturer:	KEB Automation KG Südstraße 38 32683 BARNTRUP Germany	
Product type:	Inverter type	00**T6A0**xx - xxxx x = any number or letter for different versions
	Voltage category	600V dc

The above given product is in accordance with the following directives of the European Union

Number: **EMC : 2014 / 30 / EU**
Text: Directive on the approximation of the laws of the Member States relating to electromagnetic compatibility.

Number: **Low voltage : 2014 / 35 / EU**
Text: Directive on the approximation of the laws of the Member States relating to all electrical equipment that has a voltage rating between 50V and 1000V AC or 75V and 1500V DC.

Number: **Hazardous Substances: 2011 / 65 / EEC (incl. 2015 / 863 / EU)**
Text: Directive on the approximation of the laws of the Member States relating on the restriction of the use of certain hazardous substances in electrical and electronic equipment.

Responsible: KEB Automation KG
Südstraße 38
32683 BARNTRUP

Place, date Barntrup, 31. August 2019

Issued by:

i. A. W. Hovestadt / Conformance Officer

W. Wiele / Technical Manager

This declaration of conformity is issued under the sole responsibility of KEB.

This declaration certifies the conformity with the named directives, but does not contain any assurance of quality.

The safety instructions, described in the instruction manual are to be followed.

continued on the next page

EU DECLARATION OF CONFORMITY

ANNEX 1

Document-No. / month.year: ce_dr_rens-t6-_en.docx / 09.2019

Product type:	Inverter type	00**T6A0**xx - xxxx x = any number or letter for different versions
	Voltage category	600V dc

The conformity of the above given product to the European Directive 2014/35/EU (for electrical equipment designed for use within certain voltage limits) is given by complete approval / testing to the following European harmonized standards:

EN - standard

EN 61800-5-1 / 2007	Adjustable speed electrical power drive systems – part 5-1: Safety requirements - Electrical, thermal and energy
EN 61800-2 / 2015	Adjustable speed electrical power drive systems – part 2: general requirements – rating specifications for low voltage adjustable speed a.c. power drive systems

The conformity of the above given product to the European Directive 2014/30/EU (for electromagnetic compatibility) is given by complete approval / testing to the following European harmonized standards. Base for the complete approval is the definition of a complete PDS (power drive system). For not exceeding the required limits or minimum levels of immunity it is necessary to use the KEB internal filters and observe the given wiring specifications.

EN - standard

EN 61800-3 / 2004 +A1 / 2012	Adjustable speed electrical power drive systems – part 5-1: EMC requirements and specific test methods

The conformity of the above given product to the European Directive 2011/65/EU with changes of 2015/863/EU (for restrictions of the use for certain hazardous substances in electrical and electronic equipment) is given by qualification of components and manufacturing process within the ISO 9001 QM system. The necessary information and declarations are documented and memorized.

The above given product was developed, manufactured and tested within an internal quality management system. This ISO 9001 QM system was approved by:

Notified body:	TÜV - CERT
Adress:	Zertifizierungsstelle des RWTÜV Steubenstrasse 53 D - 45138 Essen
No. of approval	041 004 500
Dated:	20.10.1994
Valid until:	December 2021

continued on the next page

EU DECLARATION OF CONFORMITY

Document No. / month.year: ce_dr_rens-t6-a_en.docx / 09.2019

Manufacturer: KEB Automation KG
Südstraße 38
32683 BARNTRUP
Germany

Product type: Inverter type 00**T6A0**xx - xxxx
x = any number or letter for different versions
Voltage category 600V dc

The above given product is in accordance with the following directives of the European Union

Number: **EMC : 2014 / 30 / EU**
Text: Directive on the approximation of the laws of the Member States relating to electromagnetic compatibility.

Number: **Low voltage : 2014 / 35 / EU**
Text: Directive on the approximation of the laws of the Member States relating to all electrical equipment that has a voltage rating between 50V and 1000V AC or 75V and 1500V DC.

Number: **Hazardous Substances: 2011 / 65 / EEC (incl. 2015 / 863 / EU)**
Text: Directive on the approximation of the laws of the Member States relating on the restriction of the use of certain hazardous substances in electrical and electronic equipment.

Responsible: KEB Automation KG
Südstraße 38
32683 BARNTRUP

Place, date Barntrup, 31. August 2019

Issued by:

i. A. W. Hovestadt / Conformance Officer

W. Wiele / Technical Manager

This declaration of conformity is issued under the sole responsibility of KEB.

This declaration certifies the conformity with the named directives, but does not contain any assurance of quality.

The safety instructions, described in the instruction manual are to be followed.

Figure 40: Declaration of conformity

6 Revision History

Version	Date	Description
00	2018-05	Pre-series
01	2018-10	Pre-series, adaptation of the standards list, symbols, nameplate and the table power input LV-DC
02	2018-11	Pre-series, addition of safety instructions, extension of the table pressure drops
03	2019-01	Pre-series, editorial changes
04	2020-04	Conversion to series version, E1 specific descriptions; change product description; editorial changes
05	2022-05	Extended to include technical information on interior temperature and fastening

Austria | KEB Automation GmbH
Ritzstraße 8 4614 Marchtrenk Austria
Tel: +43 7243 53586-0 Fax: +43 7243 53586-21
E-Mail: info@keb.at Internet: www.keb.at

Benelux | KEB Automation KG
Dreef 4 - box 4 1703 Dilbeek Belgium
Tel: +32 2 447 8580
E-Mail: info.benelux@keb.de Internet: www.keb.de

Brazil | KEB South America - Regional Manager
Rua Dr. Omar Pacheco Souza Riberio, 70
CEP 13569-430 Portal do Sol, São Carlos Brazil
Tel: +55 16 31161294 E-Mail: roberto.arias@keb.de

Czech Republic | KEB Automation GmbH
Videnska 188/119d 61900 Brno Czech Republic
Tel: +420 544 212 008
E-Mail: info@keb.cz Internet: www.keb.cz

France | Société Française KEB SASU
Z.I. de la Croix St. Nicolas 14, rue Gustave Eiffel
94510 La Queue en Brie France
Tel: +33 149620101 Fax: +33 145767495
E-Mail: info@keb.fr Internet: www.keb.fr

Germany | **Geared Motors**
KEB Antriebstechnik GmbH
Wildbacher Straße 5 08289 Schneeberg Germany
Telefon +49 3772 67-0 Telefax +49 3772 67-281
Internet: www.keb-drive.de E-Mail: info@keb-drive.de

Italy | KEB Italia S.r.l. Unipersonale
Via Newton, 2 20019 Settimo Milanese (Milano) Italia
Tel: +39 02 3353531 Fax: +39 02 33500790
E-Mail: info@keb.it Internet: www.keb.it

Japan | KEB Japan Ltd.
15 - 16, 2 - Chome, Takanawa Minato-ku Tokyo 108 - 0074 Japan
Tel: +81 33 445-8515 Fax: +81 33 445-8215
E-Mail: info@keb.jp Internet: www.keb.jp

P. R. China | KEB Power Transmission Technology (Shanghai) Co. Ltd.
No. 435 QianPu Road Chedun Town Songjiang District
201611 Shanghai P.R. China
Tel: +86 21 37746688 Fax: +86 21 37746600
E-Mail: info@keb.cn Internet: www.keb.cn

Poland | KEB Automation KG
Tel: +48 60407727
E-Mail: roman.trinczek@keb.de Internet: www.keb.de

Republic of Korea | KEB Automation KG
Deoksan-Besttel 1132 ho Sangnam-ro 37
Seongsan-gu Changwon-si Gyeongsangnam-do Republic of Korea
Tel: +82 55 601 5505 Fax: +82 55 601 5506
E-Mail: jaeok.kim@keb.de Internet: www.keb.de

Russian Federation | KEB RUS Ltd.
Lesnaya str, house 30 Dzerzhinsky MO
140091 Moscow region Russian Federation
Tel: +7 495 6320217 Fax: +7 495 6320217
E-Mail: info@keb.ru Internet: www.keb.ru

Spain | KEB Automation KG
c / Mitjer, Nave 8 - Pol. Ind. LA MASIA
08798 Sant Cugat Sesgarrigues (Barcelona) Spain
Tel: +34 93 8970268 Fax: +34 93 8992035 E-Mail: vb.espana@keb.de

Switzerland | KEB Automation AG
Witzbergstrasse 24 8330 Pfaeffikon/ZH Switzerland
Tel: +41 43 2886060 Fax: +41 43 2886088
E-Mail: info@keb.ch Internet: www.keb.ch

United Kingdom | KEB (UK) Ltd.
5 Morris Close Park Farm Indusrial Estate
Wellingborough, Northants, NN8 6 XF United Kingdom
Tel: +44 1933 402220 Fax: +44 1933 400724
E-Mail: info@keb.co.uk Internet: www.keb.co.uk

United States | KEB America, Inc
5100 Valley Industrial Blvd. South
Shakopee, MN 55379 United States
Tel: +1 952 2241400 Fax: +1 952 2241499
E-Mail: info@kebamerica.com Internet: www.kebamerica.com

MORE KEB PARTNERS WORLDWIDE:

... www.keb.co.uk/contact/contact-worldwide

Automation **with Drive**

www.keb.de

KEB Automation KG Suedstrasse 38 32683 Barntrup Tel. +49 5263 401-0 E-Mail: info@keb.de